Diesel Generator Set

MTU 12V1600 DS730

400 – 230 V/662 kVA/50 Hz/prime power/series 1600 – 12V1600

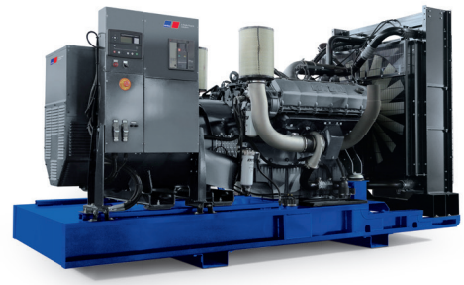

Optional equipment shown. Standard equipment may vary.

Product highlights

Benefits
- Industry-leading average load factor
- Low fuel consumption
- Emissions optimizations available
- High availability and reliability
- Outstanding load acceptance
- Long maintenance intervals

Support
- Global product support offered

Standards
- Engine-generator set is designed and manufactured in facilities certified to standards ISO 2008:9001
- Generator set complies to ISO 8528 and fullfills performance level G3
- Generator meets BS5000; NEMA MG 1; ISO; DIN EN and IEC standards

Available optimizations
- TA-Luft (NOx < 1500mg/m^3 i.N.) optimized
- NEA Singapore for off road diesel engines (ORDE)
- Fuel optimized

Wide standard scope of supply
- 4P circuit breaker
- Island operation control panel
- Integrated fuel tank
- Industrial silencer (15 dB(A))
- Batteries & battery charger

Complete range of accessories available
- Sound attenuated enclosure
- Fuel system accessories
- Control panel & ATS
- Range of additional electronical options

Warranty
- Standard 36 months warranty after shipment

A Rolls-Royce solution

Application data [1)]

Engine

Manufacturer	MTU
Model	12V1600G20F
Type	4-cycle
Arrangement	12V
Displacement: l	21
Bore: mm	122
Stroke: mm	150
Compression ratio	17.5
Rated rpm	1500
Engine governor	ECU 8
Gross power: kWm	576
Air cleaner	dry

Fuel system

Max. fuel flow: l/hr	342
Fuel tank capacity: OPU (EPU) in l	740 (950)
Autonomy: hr	7

Fuel consumption

	l/h
At 100% of power rating:	128.6
At 75% of power rating:	98.96
At 50% of power rating:	68.99

Liquid capacity

Total oil system: l	72.5
Total coolant capacity: l	99

Generator

Generator brand	Mecc-Alte
Generator type	HM355B3
Insulation class	H-class
Bearing	single bearing
Enclosure	IP23 M
Voltage regulation	A.V.R. (electronic)
Exciting system	self-excited, brushless

Electrical

Electric system volts DC	24
Number of batteries	2
Capacity: Ah	2x 75

Air requirements

Aspirating: m^3/min	48
Cooling air flow: m^3/s	11.7

Exhaust system

Gas temp. (stack): °C	485
Gas volume at stack temp.: m^3/min	126
Maximum allowable back pressure: kPa	15

Cooling/radiator system

Ambient capacity of radiator: OPU (EPU) in °C	40 (35)
Pressure on rad. exhaust: kPa	0.2
Heat rejection to coolant: kW	236

Standard and optional features

System ratings (kW/kVA)

	12V1600 DS730
	Prime operation
Voltage	400 V
Phase	Three phase
Hz	50
kWel*	529.6
kVA**	662
Rated AMPS	955.5

* cos phi = 1,0

** cos phi = 0,8

Also available for following voltages 380V & 415V - for details please contact your local MTU dealer.

1 Technical data is for a fuel-optimized unit.

Standard and optional features

Engine

- ■ 4- strokes diesel engine
- ■ Flywheel housing SAE 1
- ■ Flywheel 14”
- ■ Four-valve, overhead camshaft
- ■ Piston cooling via oil spray nozzle
- ■ Forged crankshaft & connecting rods
- ■ Oil pan
- ■ Lube oil circulation pump
- ■ Dry exhaust manifolds
- ■ Hot components and radiator guards
- ■ Mobile components guards
- ■ Lube oil filter

Fuel system

- ■ Fuel main filter
- ■ Fuel pre-filter with water seperator
- ■ Common rail fuel injection
- ■ Integrated fuel tank (level sensor and drain cap incl.)
- ☐ Automatic fuel transfer pump
- ☐ Heavy-duty fuel pre-filter with water seperator
- ☐ 3-way valve for fuel filling
- ☐ Fuel cooler

Generator

- ■ 3-Phase, syncronos, brushless, self exciting, self regulating, self ventilating alternator
- ☐ Winding temperature sensors
- ■ IP23 M protection degree
- ☐ IP23 protection cover
- ☐ Bearing temperature sensors
- ■ Insulation class H
- ☐ Anti condensation heater
- ☐ Permanent magnet

Control panel & electric options

- ■ Control and power electric panel, with measurements devices and contoller
- ☐ ATS (Automatic Transfer Switch)
- ☐ Control version for parallel operation
- ☐ Control version for synchronizing a single genset with mains
- ☐ Programmable timer for MM7 and MC7
- ☐ Remote display
- ☐ Expansion module for CAN communication
- ☐ Change over power supply for MC7
- ☐ Input output/LED expansion modules for DeepSea controllers
- ☐ ModBus connection to customer systems TCP/IP
- ☐ Control version for synchronizing with mains without blackout
- ☐ Converter kits CAN to RS485/USB/LAN

Circuit breaker/power distribution

- ■ 4 poles manual circuit breaker (motorized with DeepSea controllers)

Starting/charging system

- ■ 24V electric system
- ■ Starting batteries installed
- ■ Pre-heating resistance/jacket water heater
- ■ Battery charging alternator
- ■ Battery disconnector
- ■ Battery charger

Air intake system

- ■ Exhaust turbochargers
- ■ Set of dry-type air filters with containment indicator
- ■ Intercooler, integrated in radiator
- ☐ Heavy duty air filter with automatic dust evacuation

■ Represents standard features

☐ Represents optional features

Standard and optional features

Exhaust system

- ■ Industrial silencer 15 dB(A)
- ☐ Residential silencer 35 dB(A)
- ☐ Exhaust bellows

Cooling system

- ■ Coolant circulation pump
- ■ Front type radiator for jacket water and charge aircooling circuit with integrated expansion tank
- ■ Engine mounted fan drive

Mounting system

- ■ Mounted on steel base frame
- ■ Resilent mounting of engine and generator

Enclosures

- ☐ Sound proof enclosure
- ☐ Socket box
- ☐ Increased fuel tank capacity

Documentation & certifications

- ■ Genset & component manuals
- ■ Maintenance schedule
- ☐ CE-certification for EU
- ■ Fluids and lubricants specification

■ Represents standard features
☐ Represents optional features

Weights and dimensions

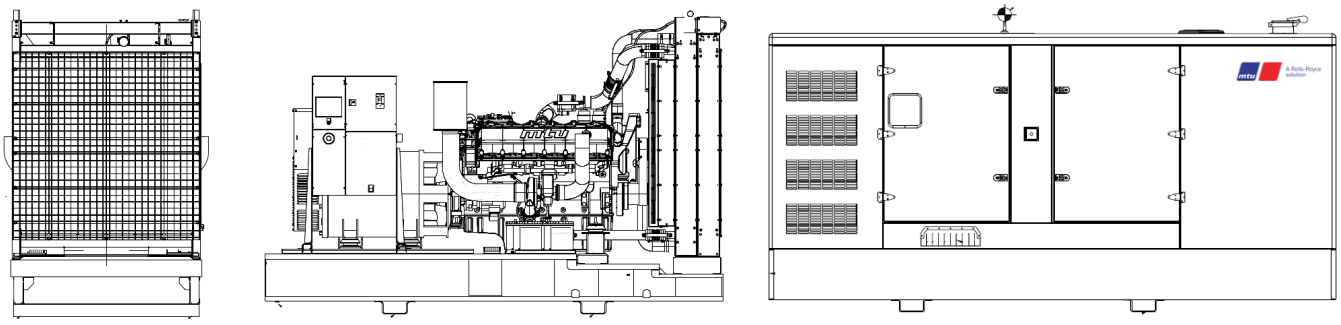

Drawing above for illustration purposes only, based on standard open power 400 Volt engine-generator set. Lengths may vary with other voltages. Do not use for installation design. See website for unit specific template drawings.

System	Dimensions (L x W x H)	Weight (wet/with standard accessories)
Open power unit (OPU)	3600 x 1604 x 2121 mm	4671 kg
Enclosed power unit	5000 x 2100 x 2369 mm	6881 kg

Consult the factory for accurate weights and dimensions for your specific engine-generator set. Lengths may vary with other voltages. Do not use for installation design.

Sound data

Unit type	
Open power unit: dB(A)	109
Enclosed power unit: dB(A)	90

According to 2000/14/CE.
Sound data is provided at 7m for 75% prime power.

Rating definitions and conditions

- Prime power ratings apply to installations where utility power is unavailable or unreliable. At varying load, the number of generator set operating hours is unlimited. A 10% overload capacity is available for one hour in twelve. Ratings are in accordance with ISO 8528-1, ISO 3046-1, BS 5514, AS 2789 and DIN 6271. Average load factor: < 75%.
- Consult your local MTU distributor for derating information.

Rated power for reference conditions at 25°C and 100m above sea level.

Subject to change. | 3237961 | Edition 01/19 | ESM 2019-09.