Diesel Generator Set

16V2000 DS1000

Air charge-air cooling/1000kVA/50 Hz/ standby power (fuel consumption optimized)/380 - 415V

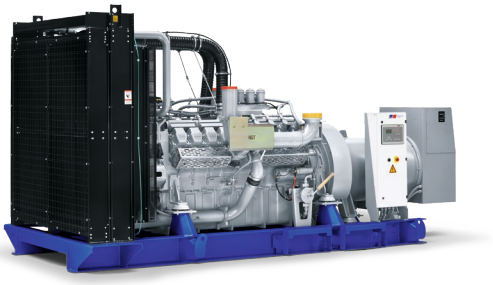

Optional equipment shown. Standard equipment and colors (base frame, generator: grey, engine: blue) may vary.

Product highlights

Benefits

- Industry-leading average load factor
- Outstanding fuel economy
- Optimized maintenance intervals
- Low installation costs
- Best-in-class reliability and availability
- Lifting vertically or with diagonal pull
- Compact design

System ratings [1)]

Standby power	16V2000 DS1000	16V2000 DS1000	16V2000 DS1000
Voltage (L-L)	380V	400V	415V
Phase	3	3	3
PF	0.8	0.8	0.8
Hz	50	50	50
kW	800	800	800
kVA	1000	1000	1000
Amps	1519	1443	1319
Generator model	575RSL7074	575RSL7074	575RSL7074
Temp rise	150°C/40°C	150°C/40°C	150°C/40°C
Connection	6 LEAD HI WYE	6 LEAD HI WYE	6 LEAD HI WYE

1 Power available up to 40°C/400 m

A Rolls-Royce solution

Certifications and standards

- Engine-generator set is designed and manufactured in facilities certified to standards ISO 9001:2008 and ISO 14001:2004
- Performance Assurance Certification (PAC)
  - Engine-generator set tested according to ISO 8528-5 for transient response
  - Verified product design, quality and performance integrity
  - All engine systems are prototype and factory tested
- Power rating
  - Permissible average power output during 24 hours of operation up to 85%

Standard equipment [1)]

Engine

- Air filters
- Oil pump for draining
- Full flow oil filters
- Closed crankcase ventilation
- Jacket water pump
- Thermostats
- Exhaust manifold – dry
- Belt driven radiator fan
- Radiator – unit mounted
- Electric starting motor – 24V
- Governor – electronic isochronous
- Base – formed steel
- SAE flywheel & bell housing
- Charging alternator
- Flexible fuel connectors
- Flexible exhaust connection

Generator

- NEMA MG1, IEEE and ANSI standards compliance for temperature rise and motor
- VDE 0530, IEC 60034-1, BS 4999, BS 5000, CSA 22.2-100, AS 1359
- Sustained short circuit current of up to 250% of the rated current for up to 10 seconds
- Self-ventilated and drip-proof IP23
- Superior voltage waveform
- Digital, volts-per-hertz regulator
- No load to full load regulation
- Brushless alternator with brushless pilot exciter
- 4 Pole, rotating field
- 150 °C maximum standby temperature rise
- Heavy duty shielded ball bearings with a minimum B-10 life of 40,000 hrs
- Flexible coupling
- Full amortisseur windings
- 3-phase voltage sensing
- ±0.25% voltage regulation
- 100% of rated load – one step according to NFPA 110
- 3% maximum harmonic content

Standard features [1)]

- The engine-generator set complies to G3
- Engine generator set tested according to ISO 8528-5 for transient response
- Accepts rated load in one step as per NFPA 110
- All engine-generator sets are type and factory tested
- Global product support
- Cooling System (integral set-mounted; engine driven fan)
- 16V2000 diesel engine (31,84 liter (1943 cu inch) displacement; 4-stroke)
- Engine-generator resiliently mounted
- Complete range of accessories
- Brushless, rotating field generator (PMG excitation; 250% short circuit capability; 2/3 pitch stator windings)
- Complete system metering
- LCD display

1 Represents standard product only. Consult your local MTU distributor for additional configurations.

Application data

Engine

Manufacturer	MTU
Model	16V2000G25TD
Type	4-stroke
Arrangement	16V
Displacement/cylinder: l (cu inch)	1.99 (121)
Bore: mm (inch)	130 (5.1)
Stroke: mm (inch)	150 (5.9)
Compression ratio	16:1
Rated speed: rpm	1500
Engine governor	electronic isochronous
Max power: kWm (bhp)	890 (1197)
Speed regulation	±0.25%
Air filter	dry

Lube oil capacity

Total oil system: l (gal)	102 (27)

Electrical

Electric Volts DC	24
Cold cranking amps under -17.8°C (0°F)	1000

Fuel system

Fuel supply connection size	M22 x 1,5 - 60°/male
Fuel return connection size	M12 x 1,5 - 60°/male
Maximum fuel lift: m (ft)	5 (16)
Recommended fuel	see MTU fluids & lubrication spec.
Total fuel flow: l/hr (gal/hr)	600 (159)

Fuel consumption[1)]

	gal/hr	l/hr	g/kwh
At 100% of power rating:	56	212	198
At 75% of power rating:	42	158	196
At 50% of power rating:	28	108	201

Cooling/radiator system

Ambient capacity of radiator: °C	40 (optional 50)[2)]
Max. restriction of cooling air, intake, and discharge side of rad.: kPa (in. H_2O)	0,2 (0,803)
Water pump capacity: l/min (gpm)	667 (176)
Heat rejection to coolant: kW (BTUM)	400 (22,748)
Heat rejection to after cooler: kW (BTUM)	170 (9,668)
Heat radiated to ambient: kW (BTUM)	45 (2,559)
Engine coolant capacity: l (gal)	110 (29)
Coolant to cooler temperature: °C (°F)	95 (203)

Air requirements[3)]

Aspirating: m^3/min (SCFM)	66 (2329)
Air flow required for rad. cooled unit: m^3/min	1236 (43606)

Exhaust system

Gas temp. (stack): °C (°F)	530 (986)
Gas volume flow temp: m^3/min (SCFM)	180 (6350)
Maximum allowable back pressure: kPA	8,5 (34)

1 Values in accordance with ISO 3046-1. Conversion calculated with fuel density of 0.83 g/ml.

2 System ratings at 50°C may differ.

3 Air density = 1.184 kg/m^3 (0.0739 lbm/ft^3)

Weights and dimensions

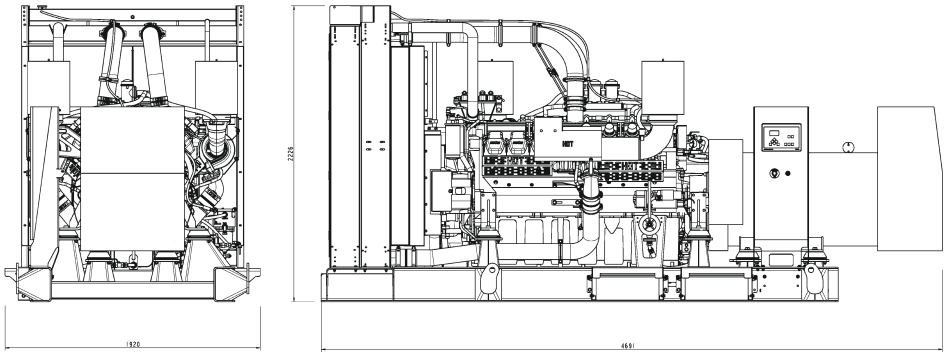

Drawing above for illustration purposes only, based on standard open power 400 Volt engine-generator set. Lengths may vary with other voltages. Do not use for installation design. See website for unit specific template drawings.

System	Dimensions (L x W x H)	Weight (dry/less tank)
Open power unit (OPU)	4691 x 1920 x 2226 mm (185 x 76 x 88 inch)	6388 kg (14,084 lbs)

Weights and dimensions are based on open power units and are estimates only. Consult the factory for accurate weights and dimensions for your specific engine-generator set.

Sound data

— Consult your local MTU distributor for sound data.

Emissions data

— Consult your local MTU distributor for emissions data.

Rating definitions and conditions

— Standby ratings apply to installations served by a reliable utility source. The standby rating is applicable to varying loads for the duration of a power outage. No overload capability for this rating. Ratings are in accordance with ISO 8528-1, ISO-3046-1, BS 5514 and AS 2789. Average load factor: ≤ 85%. Operating hours/year: max. 500.
— Consult your local MTU distributor for derating information.

Subject to change. | 3236101 | Edition 01/19 | ESM 2019-11.