Diesel Generator Set

MTU 20V4000 DS3300

380V – 11 kV/50 Hz/prime power/NEA (ORDE) optimized 20V4000G84F/water charge air cooling

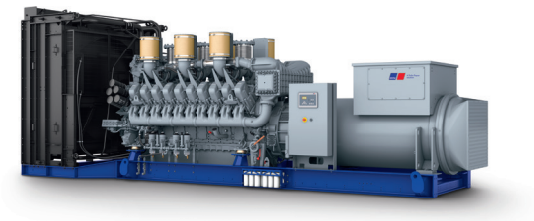

Optional equipment and finishing shown. Standard may vary.

Product highlights

Benefits
- Low fuel consumption
- Optimized system integration ability
- High reliability
- High availability of power
- Long maintenance intervals

Support
- Global product support offered

Standards
- Engine-generator set is designed and manufactured in facilities certified to standards ISO 2008:9001 and ISO 2004:14001
- Generator set complies to ISO 8528
- Generator meets NEMA MG1, BS5000, ISO, DIN EN and IEC standards
- NFPA 110

Power rating
- System ratings: 3040 kVA - 3060 kVA
- Accepts rated load in one step per NFPA 110
- Generator set complies to G3 according to ISO 8528-5
- Generator set exceeds load steps according to ISO 8528-5

Performance assurance certification (PAC)
- Engine-generator set tested to ISO 8528-5 for transient response
- 85% load factor
- Verified product design, quality and performance integrity
- All engine systems are prototype and factory tested

Complete range of accessories available
- Control panel
- Power panel
- Circuit breaker/power distribution
- Fuel system
- Fuel connections with shut-off valve mounted to base frame
- Starting/charging system
- Exhaust system
- Mechanical and electrical driven radiators
- Medium and oversized voltage alternators

Emissions
- NEA (ORDE) optimized

Certifications
- CE certification option
- Unit certificate acc. to BDEW (German Grid-Code)

A Rolls-Royce solution

Application data [1)]

Engine	
Manufacturer	MTU
Model	20V4000G84F
Type	4-cycle
Arrangement	20V
Displacement: l	95.4
Bore: mm	170
Stroke: mm	210
Compression ratio	16.4
Rated speed: rpm	1500
Engine governor	ECU 9
Max power: kWm	2850
Air cleaner	Dry

Fuel system	
Maximum fuel lift: m	5
Total fuel flow: l/min	27

Fuel consumption [2)]	l/hr	g/kwh
At 100% of power rating:	683.3	199
At 75% of power rating:	527.9	205
At 50% of power rating:	365.7	213

Liquid capacity (lubrication)	
Total oil system capacity: l	390
Engine jacket water capacity: l	205
Intercooler coolant capacity: l	50

Combustion air requirements	
Combustion air volume: m^3/s	2.3
Max. air intake restriction: mbar	50

Cooling/radiator system	
Coolant flow rate (HT circuit): m^3/hr	80
Coolant flow rate (LT circuit): m^3/hr	32.5
Heat rejection to coolant: kW	1090
Heat radiated to charge air cooling: kW	580
Heat radiated to ambient: kW	105
Fan power for electr. radiator (40°C): kW	70

Exhaust system	
Exhaust gas temp. (after turbocharger): °C	580
Exhaust gas volume: m^3/s	9.3
Maximum allowable back pressure: mbar	85
Minimum allowable back pressure: mbar	30

Standard and optional features

System ratings (kW/kVA)

Generator model	Voltage	NEA (ORDE) optimized					
		without radiator			with mechanical radiator		
		kWel	kVA*	AMPS	kWel	kVA*	AMPS
Leroy Somer LSA53.2 M12 (Low voltage Leroy Somer standard)	380 V	2520	3150	4786	2456	3070	4664
	400 V	2520	3150	4547	2456	3070	4431
	415 V	2520	3150	4382	2456	3070	4271
Marathon 1030FDL7094 (Low voltage Marathon)	380 V	2520	3150	4786	2456	3070	4664
	400 V	2520	3150	4547	2456	3070	4431
	415 V	2520	3150	4382	2456	3070	4271
Marathon 1040FDH7102 (Medium volt. marathon)	11 kV	2528	3160	166	2456	3070	161
Leroy Somer LSA54.2 XL11 (Medium volt. Leroy Somer)	11 kV	2536	3170	166	2464	3080	162

* cos phi = 0.8

1 All data refers only to the engine and is based on ISO standard conditions (25°C and 100m above sea level).

2 Values referenced are in accordance with ISO 3046-1. Conversion calculated with fuel density of 0.83 g/ml. All fuel consumption values refer to rated engine power.

Standard and optional features

Engine

- ■ 4-Cycle
- ■ Standard single stage air filter
- ■ Oil drain extension & shut-off valve
- ■ Closed crankcase ventilation
- ■ Governor-electronic isochronous
- ■ Common rail fuel injection
- ■ NEA (ORDE) optimized engine

Generator

- ■ 4 pole three-phase synchronous generator
- ■ Brushless, self-excited, self-regulating, self-ventilated
- ■ Digital voltage regulator
- ■ Anti condensation heater
- ■ Stator winding Y-connected, accessible neutral (brought out)
- ■ Protection IP23
- ■ Insulation class H, utilization acc. to H
- ■ Radio suppression EN55011, group 1, cl. B
- ■ Short circuit capability 3xIn for 10sec
- ■ Winding and bearing RTDs (without monitoring)
- ■ Excitation by AREP
- ■ Mounting of CT´s: 2 core CT´s
- ■ Winding pitch: 2/3 winding
- ■ Voltage setpoint adjustment ± 10%
- ■ Meets NEMA MG-1, BS 5000, IEC 60034-1, VDE 0530, DIN EN 12601, AS1359 and ISO 8528 requirements
- ■ Leroy Somer low voltage generator
- ☐ Marathon low voltage generator
- ☐ Oversized generator
- ☐ Medium voltage generator

Cooling system

- ■ Jacket water pump
- ■ Thermostat(s)
- ■ Water charge air cooling
- ☐ Mechanical radiator
- ☐ Electrical driven front-end cooler
- ☐ Jacket water heater

Control panel

- ■ Pre-wired control cabinet for easy application of customized controller (V1+)
- ☐ Island operation (V2)
- ☐ Automatic mains failure operation with ATS (V3a)
- ☐ Automatic mains failure operation incl. control of generator and mains breaker (V3b)
- ☐ Island parallel operation of multiple gensets (V4)
- ☐ Automatic mains failure operation with short (< 10s) mains parallel overlap synchronization (V5)
- ☐ Mains parallel operation of a single genset (V6)
- ☐ Mains parallel operation of multiple gensets (V7)
- ☐ Basler controller
- ☐ Deif controller
- ■ Complete system metering
- ■ Digital metering
- ■ Engine parameters
- ■ Generator protection functions
- ■ Engine protection
- ■ SAE J1939 engine ECU communications
- ■ Parametrization software
- ■ Multilingual capability
- ■ Multiple programmable contact inputs
- ■ Multiple contact outputs
- ■ Event recording
- ■ IP 54 front panel rating with integrated gasket
- ☐ Different expansion modules
- ☐ Remote annunciator
- ☐ Daytank control
- ☐ Generator winding temperature monitoring
- ☐ Generator bearing temperature monitoring
- ☐ Modbus TCP-IP

Power panel

- ☐ Available in 600x600 and 600x1000
- ☐ Phase monitoring relay 230V/400V
- ☐ Supply for battery charger
- ☐ Supply for jacket water heater
- ☐ Supply for anti condensation heating
- ☐ Plug socket cabinet for 230V compatible Euro/USA
- ☐ Supply for electrical driven radiator from 45kW – 75kW (PP 600x1000)

■ Represents standard features

☐ Represents optional features

Standard and optional features

Circuit breaker/power distribution

- ☐ 3-pole circuit breaker
- ☐ 4-pole circuit breaker
- ☐ Manual-actuated circuit breaker
- ☐ Electrical-actuated circuit breaker
- ☐ Stand-alone solution in seperate cabinet

Fuel system

- ■ Flexible fuel connectors mounted to base frame
- ☐ Fuel filter with water separator
- ☐ Fuel filter with water separator heavy-duty
- ☐ Switchable fuel filter with water separator
- ☐ Switchable fuel filter with water separator heavy-duty
- ☐ Seperate fuel cooler
- ☐ Fuel cooler integrated into cooling equipment

Starting/charging system

- ■ 24V starter
- ☐ Starter batteries, cables, rack, disconnect switch
- ☐ Battery charger

Mounting system

- ■ Welded base frame
- ■ Resilient engine and generator mounting
- ■ Modular base frame design

Exhaust system

- ☐ Exhaust bellows with connection flange
- ☐ Exhaust silencer with 10 dB(A) sound attenuation
- ☐ Exhaust silencer with 30 dB(A) sound attenuation
- ☐ Exhaust silencer with 40 dB(A) sound attenuation
- ☐ Y-connection-pipe

■ Represents standard features
☐ Represents optional features

Weights and dimensions

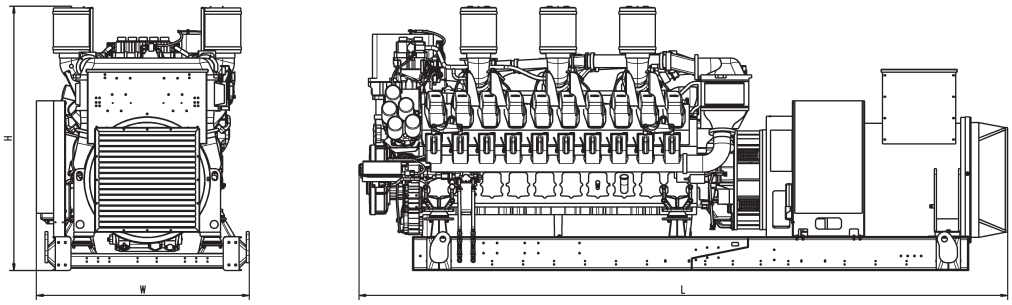

Drawing above for illustration purposes only, based on a standard open power 400 Volt engine-generator set. Lengths may vary with other voltages. Do not use for installation design. See website for unit specific template drawings.

System	Dimensions (L x W x H)	Weight (dry/less tank)
Open power unit (OPU)	5760 x 1887 x 2332 mm	15819 kg

Weights and dimensions are based on open power units and are estimates only. Consult the factory for accurate weights and dimensions for your specific engine-generator set.

Sound data

— Consult your local MTU distributor for sound data.

Emissions data

— Consult your local MTU distributor for emissions data.

Rating definitions and conditions

— Standby ratings apply to installations served by a reliable utility source. The standby rating is applicable to varying loads for the duration of a power outage. No overload capability for this rating. Ratings are in accordance with ISO 8528-1, ISO-3046-1, BS 5514 and AS 2789. Average Load Factor: ≤ 85%. Operating hours/year: max. 500.
— Consult your local MTU Distributor for derating information.

Subject to change. | 3237871 | Edition 01/19 | ESM 2019-08.