Diesel Generator Set

MTU 12V4000 DS1650

380V – 11 kV/50 Hz/data center continuous power/NEA (ORDE) optimized/ 12V4000G14F/water charge air cooling

Optional equipment and finishing shown. Standard may vary.

Product highlights

Benefits
- Low fuel consumption
- Optimized system integration ability
- High reliability
- High availability of power
- Long maintenance intervals

Support
- Global product support offered

Standards
- Engine-generator set is designed and manufactured in facilities certified to standards ISO 2008:9001 and ISO 2004:14001
- Generator set complies to ISO 8528
- Generator meets NEMA MG1, BS5000, ISO, DIN EN and IEC standards
- NFPA 110

Power rating
- System ratings: 1490 kVA - 1600 kVA
- Accepts rated load in one step per NFPA 110
- Generator set complies to G3 according to ISO 8528-5
- Generator set exceeds load steps according to ISO 8528-5

Performance assurance certification (PAC)
- Engine-generator set tested to ISO 8528-5 for transient response
- 100% load factor
- Verified product design, quality and performance integrity
- All engine systems are prototype and factory tested

Complete range of accessories available
- Control panel
- Power panel
- Circuit breaker/power distribution
- Fuel system
- Fuel connections with shut-off valve mounted to base frame
- Starting/charging system
- Exhaust system
- Mechanical and electrical driven radiators
- Medium and oversized voltage alternators

Emissions
- NEA (ORDE) optimized

Certifications
- CE certification option
- Unit certificate acc. to BDEW (German Grid-Code)

A Rolls-Royce solution

Application data [1)]

Engine	
Manufacturer	MTU
Model	12V4000G14F
Type	4-cycle
Arrangement	12V
Displacement: l	57.2
Bore: mm	170
Stroke: mm	210
Compression ratio	16.4
Rated speed: rpm	1500
Engine governor	ECU 9
Max power: kWm	1420
Air cleaner	Dry

Fuel system	
Maximum fuel lift: m	5
Total fuel flow: l/min	16

Fuel consumption [2)]	l/hr	g/kwh
At 100% of power rating:	342.2	200
At 75% of power rating:	274.6	214
At 50% of power rating:	200.2	234

Liquid capacity (lubrication)	
Total oil system capacity: l	260
Engine jacket water capacity: l	160
Intercooler coolant capacity: l	40

Combustion air requirements	
Combustion air volume: m^3/s	1.8
Max. air intake restriction: mbar	50

Cooling/radiator system	
Coolant flow rate (HT circuit): m^3/hr	56
Coolant flow rate (LT circuit): m^3/hr	30
Heat rejection to coolant: kW	545
Heat radiated to charge air cooling: kW	260
Heat radiated to ambient: kW	75
Fan power for electr. radiator (40°C): kW	55

Exhaust system	
Exhaust gas temp. (after turbocharger): °C	505
Exhaust gas volume: m^3/s	4.9
Maximum allowable back pressure: mbar	85
Minimum allowable back pressure: mbar	30

Standard and optional features

System ratings (kW/kVA)

Generator model	Voltage	NEA (ORDE) optimized					
		without radiator			with mechanical radiator		
		kWel	kVA*	AMPS	kWel	kVA*	AMPS
Leroy Somer LSA52.3 S5 (Low voltage Leroy Somer standard)	380 V	1280	1600	2431	1216	1520	2309
	400 V	1280	1600	2309	1216	1520	2194
	415 V	1280	1600	2226	1216	1520	2115
Marathon 743RSL7090 (Low voltage Marathon)	380 V	1272	1590	2416	1224	1530	2325
	400 V	1264	1580	2281	1224	1530	2208
	415 V	1192	1490	2073	1192	1490	2073
Marathon 744RSL7091 (Low voltage Marathon oversized)	380 V	1272	1590	2416	1224	1530	2325
	400 V	1264	1580	2281	1224	1530	2208
	415 V	1192	1490	2073	1192	1490	2073
Marathon 1020FDH7095 (Medium volt. marathon)	11 kV	1264	1580	83	1216	1520	80
Leroy Somer LSA53.2 VL6 (Medium volt. Leroy Somer)	11 kV	1272	1590	83	1216	1520	80

* cos phi = 0.8

1 All data refers only to the engine and is based on ISO standard conditions (25°C and 100m above sea level).

2 Values referenced are in accordance with ISO 3046-1. Conversion calculated with fuel density of 0.83 g/ml. All fuel consumption values refer to rated engine power.

Standard and optional features

Engine

- ■ 4-Cycle
- ■ Standard single stage air filter
- ■ Oil drain extension & shut-off valve
- ■ Closed crankcase ventilation with improved oil seperator
- ■ Governor-electronic isochronous
- ■ Common rail fuel injection
- ■ NEA (ORDE) optimized engine
- ■ Centrifugal oil filter

Generator

- ■ 4 pole three-phase synchronous generator
- ■ Brushless, self-excited, self-regulating, self-ventilated
- ■ Digital voltage regulator
- ■ Anti condensation heater
- ■ Stator winding Y-connected, accessible neutral (brought out)
- ■ Protection IP23
- ■ Insulation class H, utilization acc. to H
- ■ Radio suppression EN55011, group 1, cl. B
- ■ Short circuit capability 3xIn for 10sec
- ■ Winding and bearing RTDs (without monitoring)
- ■ Excitation by AREP
- ■ Mounting of CT´s: 2 core CT´s
- ■ Winding pitch: 2/3 winding
- ■ Voltage setpoint adjustment ± 10%
- ■ Meets NEMA MG-1, BS 5000, IEC 60034-1, VDE 0530, DIN EN 12601, AS1359 and ISO 8528 requirements
- ■ Leroy Somer low voltage generator
- ☐ Marathon low voltage generator
- ☐ Oversized generator
- ☐ Medium voltage generator

Cooling system

- ■ Jacket water pump
- ■ Thermostat(s)
- ■ Water charge air cooling
- ☐ Mechanical radiator
- ☐ Electrical driven front-end cooler
- ☐ Jacket water heater

Control panel

- ■ Pre-wired control cabinet for easy application of customized controller (V1+)
- ☐ Island operation (V2)
- ☐ Automatic mains failure operation with ATS (V3a)
- ☐ Automatic mains failure operation incl. control of generator and mains breaker (V3b)
- ☐ Island parallel operation of multiple gensets (V4)
- ☐ Automatic mains failure operation with short (< 10s) mains parallel overlap synchronization (V5)
- ☐ Mains parallel operation of a single genset (V6)
- ☐ Mains parallel operation of multiple gensets (V7)
- ☐ Basler controller
- ☐ Deif controller
- ■ Complete system metering
- ■ Digital metering
- ■ Engine parameters
- ■ Generator protection functions
- ■ Engine protection
- ■ SAE J1939 engine ECU communications
- ■ Parametrization software
- ■ Multilingual capability
- ■ Multiple programmable contact inputs
- ■ Multiple contact outputs
- ■ Event recording
- ■ IP 54 front panel rating with integrated gasket
- ☐ Different expansion modules
- ☐ Remote annunciator
- ☐ Daytank control
- ☐ Generator winding temperature monitoring
- ☐ Generator bearing temperature monitoring
- ☐ Modbus TCP-IP

Power panel

- ☐ Available in 600x600 and 600x1000
- ☐ Phase monitoring relay 230V/400V
- ☐ Supply for battery charger
- ☐ Supply for jacket water heater
- ☐ Supply for anti condensation heating
- ☐ Plug socket cabinet for 230V compatible Euro/USA
- ☐ Supply for electrical driven radiator from 45kW – 75kW (PP 600x1000)

■ Represents standard features

☐ Represents optional features

Standard and optional features

Circuit breaker/power distribution

- ☐ 3-pole circuit breaker
- ☐ 4-pole circuit breaker
- ☐ Manual-actuated circuit breaker
- ☐ Electrical-actuated circuit breaker
- ☐ Stand-alone solution in seperate cabinet

Fuel system

- ■ Flexible fuel connectors mounted to base frame
- ☐ Fuel filter with water separator
- ☐ Fuel filter with water separator heavy-duty
- ☐ Switchable fuel filter with water separator
- ☐ Switchable fuel filter with water separator heavy-duty
- ☐ Seperate fuel cooler
- ☐ Fuel cooler integrated into cooling equipment

Starting/charging system

- ■ 24V starter
- ☐ Starter batteries, cables, rack, disconnect switch
- ☐ Battery charger

Mounting system

- ■ Welded base frame
- ■ Resilient engine and generator mounting
- ■ Modular base frame design

Exhaust system

- ☐ Exhaust bellows with connection flange
- ☐ Exhaust silencer with 10 dB(A) sound attenuation
- ☐ Exhaust silencer with 30 dB(A) sound attenuation
- ☐ Exhaust silencer with 40 dB(A) sound attenuation
- ☐ Y-connection-pipe

■ Represents standard features
☐ Represents optional features

Weights and dimensions

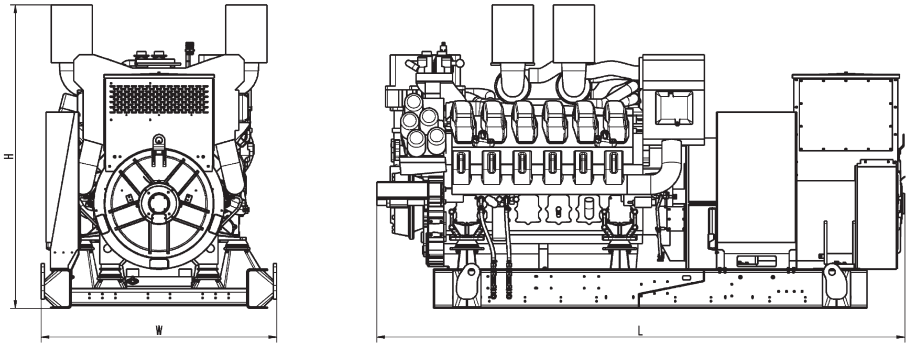

Drawing above for illustration purposes only, based on a standard open power 400 Volt engine-generator set. Lengths may vary with other voltages. Do not use for installation design. See website for unit specific template drawings.

System	Dimensions (L x W x H)	Weight (dry/less tank)
Open power unit (OPU)	4059 x 1810 x 2330 mm	10654 kg

Weights and dimensions are based on open power units and are estimates only. Consult the factory for accurate weights and dimensions for your specific engine-generator set.

Sound data

— Consult your local MTU distributor for sound data.

Emissions data

— Consult your local MTU distributor for emissions data.

Rating definitions and conditions

— Data Center Continuous Power ratings apply to Data Center installations where a reliable utility power is available and comply with Uptime Institute Tier III and IV requirements. At constant or varying load, the number of generator set operating hours is unlimited. A 10% overload capacity is available for one hour in twelve. Ratings are in accordance with ISO 8528-1, ISO 3046-1, BS 5514 and AS 2789. Average load factor: ≤ 100%..
— Consult your local MTU distributor for derating information.

Subject to change. | 3238621 | Edition 01/19 | ESM 2019-08.