Diesel Generator Set

# MTU 20V4000 DS3300

## 380V – 11 kV/50 Hz/data center continuous power/NEA (ORDE) optimized/ 20V4000G34F/water charge air cooling

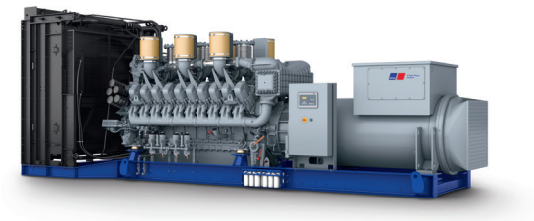

Optional equipment and finishing shown. Standard may vary.

## Product highlights

### Benefits
- Low fuel consumption
- Optimized system integration ability
- High reliability
- High availability of power
- Long maintenance intervals

### Support
- Global product support offered

### Standards
- Engine-generator set is designed and manufactured in facilities certified to standards ISO 2008:9001 and ISO 2004:14001
- Generator set complies to ISO 8528
- Generator meets NEMA MG1, BS5000, ISO, DIN EN and IEC standards
- NFPA 110

### Power rating
- System ratings: 2770 kVA - 2780 kVA
- Accepts rated load in one step per NFPA 110
- Generator set complies to G3 according to ISO 8528-5
- Generator set exceeds load steps according to ISO 8528-5

### Performance assurance certification (PAC)
- Engine-generator set tested to ISO 8528-5 for transient response
- 100% load factor
- Verified product design, quality and performance integrity
- All engine systems are prototype and factory tested

### Complete range of accessories available
- Control panel
- Power panel
- Circuit breaker/power distribution
- Fuel system
- Fuel connections with shut-off valve mounted to base frame
- Starting/charging system
- Exhaust system
- Mechanical and electrical driven radiators
- Medium and oversized voltage alternators

### Emissions
- NEA (ORDE) optimized

### Certifications
- CE certification option
- Unit certificate acc. to BDEW (German Grid-Code)

A Rolls-Royce solution

## Application data [1)]

| Engine | |
|---|---|
| Manufacturer | MTU |
| Model | 20V4000G34F |
| Type | 4-cycle |
| Arrangement | 20V |
| Displacement: l | 95.4 |
| Bore: mm | 170 |
| Stroke: mm | 210 |
| Compression ratio | 16.4 |
| Rated speed: rpm | 1500 |
| Engine governor | ECU 9 |
| Max power: kWm | 2590 |
| Air cleaner | Dry |

| Fuel system | |
|---|---|
| Maximum fuel lift: m | 5 |
| Total fuel flow: l/min | 27 |

| Fuel consumption [2)] | l/hr | g/kwh |
|---|---|---|
| At 100% of power rating: | 617.9 | 198 |
| At 75% of power rating: | 479.8 | 205 |
| At 50% of power rating: | 333.9 | 214 |

| Liquid capacity (lubrication) | |
|---|---|
| Total oil system capacity: l | 390 |
| Engine jacket water capacity: l | 205 |
| Intercooler coolant capacity: l | 50 |

| Combustion air requirements | |
|---|---|
| Combustion air volume: $m^3/s$ | 2.9 |
| Max. air intake restriction: mbar | 50 |

| Cooling/radiator system | |
|---|---|
| Coolant flow rate (HT circuit): $m^3/hr$ | 80 |
| Coolant flow rate (LT circuit): $m^3/hr$ | 32.5 |
| Heat rejection to coolant: kW | 1020 |
| Heat radiated to charge air cooling: kW | 480 |
| Heat radiated to ambient: kW | 105 |
| Fan power for electr. radiator (40°C): kW | 70 |

| Exhaust system | |
|---|---|
| Exhaust gas temp. (after turbocharger): °C | 560 |
| Exhaust gas volume: $m^3/s$ | 8.5 |
| Maximum allowable back pressure: mbar | 85 |
| Minimum allowable back pressure: mbar | 30 |

## Standard and optional features

### System ratings (kW/kVA)

| Generator model | Voltage | NEA (ORDE) optimized | | | | | |
|---|---|---|---|---|---|---|---|
| | | without radiator | | | with mechanical radiator | | |
| | | kWel | kVA* | AMPS | kWel | kVA* | AMPS |
| Leroy Somer LSA53.2 M12 (Low voltage Leroy Somer standard) | 380 V | 2336 | 2920 | 4436 | 2272 | 2840 | 4315 |
| | 400 V | 2336 | 2920 | 4215 | 2272 | 2840 | 4099 |
| | 415 V | 2336 | 2920 | 4062 | 2272 | 2840 | 3951 |
| Marathon 1030FDL7094 (Low voltage Marathon) | 380 V | 2336 | 2920 | 4436 | 2264 | 2830 | 4300 |
| | 400 V | 2336 | 2920 | 4215 | 2264 | 2830 | 4085 |
| | 415 V | 2336 | 2920 | 4062 | 2264 | 2830 | 3937 |
| Marathon 1040FDH7102 (Medium volt. marathon) | 11 kV | 2336 | 2920 | 153 | 2272 | 2840 | 149 |
| Leroy Somer LSA54.2 XL11 (Medium volt. Leroy Somer) | 11 kV | 2352 | 2940 | 154 | 2280 | 2850 | 150 |

* cos phi = 0.8

1 All data refers only to the engine and is based on ISO standard conditions (25°C and 100m above sea level).

2 Values referenced are in accordance with ISO 3046-1. Conversion calculated with fuel density of 0.83 g/ml. All fuel consumption values refer to rated engine power.

# Standard and optional features

## Engine

- ■ 4-Cycle
- ■ Standard single stage air filter
- ■ Oil drain extension & shut-off valve
- ■ Closed crankcase ventilation with improved oil seperator
- ■ Governor-electronic isochronous
- ■ Common rail fuel injection
- ■ NEA (ORDE) optimized engine
- ■ Centrifugal oil filter

## Generator

- ■ 4 pole three-phase synchronous generator
- ■ Brushless, self-excited, self-regulating, self-ventilated
- ■ Digital voltage regulator
- ■ Anti condensation heater
- ■ Stator winding Y-connected, accessible neutral (brought out)
- ■ Protection IP23
- ■ Insulation class H, utilization acc. to H
- ■ Radio suppression EN55011, group 1, cl. B
- ■ Short circuit capability 3xIn for 10sec
- ■ Winding and bearing RTDs (without monitoring)
- ■ Excitation by AREP
- ■ Mounting of CT´s: 2 core CT´s
- ■ Winding pitch: 2/3 winding
- ■ Voltage setpoint adjustment ± 10%
- ■ Meets NEMA MG-1, BS 5000, IEC 60034-1, VDE 0530, DIN EN 12601, AS1359 and ISO 8528 requirements
- ■ Leroy Somer low voltage generator
- ☐ Marathon low voltage generator
- ☐ Oversized generator
- ☐ Medium voltage generator

## Cooling system

- ■ Jacket water pump
- ■ Thermostat(s)
- ■ Water charge air cooling
- ☐ Mechanical radiator
- ☐ Electrical driven front-end cooler
- ☐ Jacket water heater

## Control panel

- ■ Pre-wired control cabinet for easy application of customized controller (V1+)
- ☐ Island operation (V2)
- ☐ Automatic mains failure operation with ATS (V3a)
- ☐ Automatic mains failure operation incl. control of generator and mains breaker (V3b)
- ☐ Island parallel operation of multiple gensets (V4)
- ☐ Automatic mains failure operation with short (< 10s) mains parallel overlap synchronization (V5)
- ☐ Mains parallel operation of a single genset (V6)
- ☐ Mains parallel operation of multiple gensets (V7)
- ☐ Basler controller
- ☐ Deif controller
- ■ Complete system metering
- ■ Digital metering
- ■ Engine parameters
- ■ Generator protection functions
- ■ Engine protection
- ■ SAE J1939 engine ECU communications
- ■ Parametrization software
- ■ Multilingual capability
- ■ Multiple programmable contact inputs
- ■ Multiple contact outputs
- ■ Event recording
- ■ IP 54 front panel rating with integrated gasket
- ☐ Different expansion modules
- ☐ Remote annunciator
- ☐ Daytank control
- ☐ Generator winding temperature monitoring
- ☐ Generator bearing temperature monitoring
- ☐ Modbus TCP-IP

## Power panel

- ☐ Available in 600x600 and 600x1000
- ☐ Phase monitoring relay 230V/400V
- ☐ Supply for battery charger
- ☐ Supply for jacket water heater
- ☐ Supply for anti condensation heating
- ☐ Plug socket cabinet for 230V compatible Euro/USA
- ☐ Supply for electrical driven radiator from 45kW – 75kW (PP 600x1000)

■ Represents standard features

☐ Represents optional features

# Standard and optional features

## Circuit breaker/power distribution

- ☐ 3-pole circuit breaker
- ☐ 4-pole circuit breaker
- ☐ Manual-actuated circuit breaker
- ☐ Electrical-actuated circuit breaker
- ☐ Stand-alone solution in seperate cabinet

## Fuel system

- ■ Flexible fuel connectors mounted to base frame
- ☐ Fuel filter with water separator
- ☐ Fuel filter with water separator heavy-duty
- ☐ Switchable fuel filter with water separator
- ☐ Switchable fuel filter with water separator heavy-duty
- ☐ Seperate fuel cooler
- ☐ Fuel cooler integrated into cooling equipment

## Starting/charging system

- ■ 24V starter
- ☐ Starter batteries, cables, rack, disconnect switch
- ☐ Battery charger

## Mounting system

- ■ Welded base frame
- ■ Resilient engine and generator mounting
- ■ Modular base frame design

## Exhaust system

- ☐ Exhaust bellows with connection flange
- ☐ Exhaust silencer with 10 dB(A) sound attenuation
- ☐ Exhaust silencer with 30 dB(A) sound attenuation
- ☐ Exhaust silencer with 40 dB(A) sound attenuation
- ☐ Y-connection-pipe

■ Represents standard features
☐ Represents optional features

## Weights and dimensions

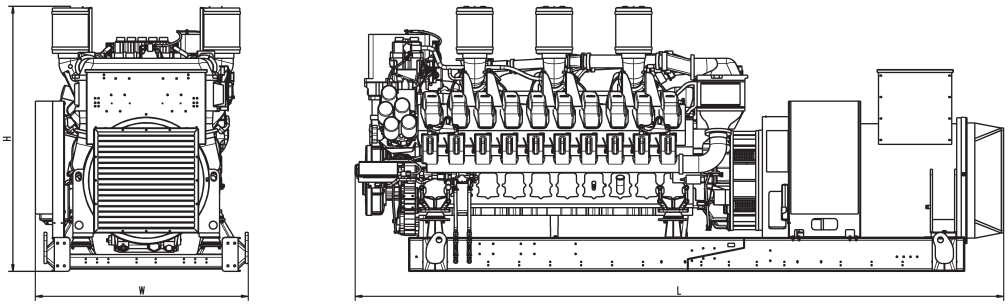


Drawing above for illustration purposes only, based on a standard open power 400 Volt engine-generator set. Lengths may vary with other voltages. Do not use for installation design. See website for unit specific template drawings.

| System | Dimensions (L x W x H) | Weight (dry/less tank) |
|---|---|---|
| Open power unit (OPU) | 5760 x 1887 x 2332 mm | 15819 kg |

Weights and dimensions are based on open power units and are estimates only. Consult the factory for accurate weights and dimensions for your specific engine-generator set.

## Sound data

— Consult your local MTU distributor for sound data.

## Emissions data

— Consult your local MTU distributor for emissions data.

## Rating definitions and conditions

— Data Center Continuous Power ratings apply to Data Center installations where a reliable utility power is available and comply with Uptime Institute Tier III and IV requirements. At constant or varying load, the number of generator set operating hours is unlimited. A 10% overload capacity is available for one hour in twelve. Ratings are in accordance with ISO 8528-1, ISO 3046-1, BS 5514 and AS 2789. Average load factor: ≤ 100%.
— Consult your local MTU distributor for derating information.

Subject to change. | 3238691 | Edition 01/19 | ESM 2019-08.