Diesel Generator Set

mtu 4R0113 DS40

40 kWe/60 Hz/Standby (SCAQMD)/208 - 600V
Reference *mtu* 4R0113 DS40 (40 kWe SCAQMD) for Prime Power for Stationary Emergency Rating Technical Data

System ratings

Voltage (L-L)	240V †	208V †	240V †	380V †	480V †	600V
Phase	1	3	3	3	3	3
PF	1	0.8	0.8	0.8	0.8	0.8
Hz	60	60	60	60	60	60
kW	40	40	40	40	40	40
kVA	40	50	50	50	50	50
Amps	166	138	120	76	60	48
skVA@30% voltage dip	63	129	129	112	172	92
Generator model	361CSL1601	361CSL1601	361CSL1601	361CSL1601	361CSL1601	361PSL1632
Temp rise	130 °C/40 °C	130 °C/40 °C	130 °C/40 °C	130 °C/40 °C	130 °C/40 °C	130 °C/40 °C
Connection	12 LEAD DOUBLE DELTA	12 LEAD WYE	12 LEAD DELTA	12 LEAD WYE	12 LEAD WYE	4 LEAD WYE

† UL 2200 offered

Certifications and standards

- Emissions
  - EPA Tier 3 certified
  - South Coast Air Quality Management District (SCAQMD)
- Generator set is designed and manufactured in facilities certified to standards ISO 9001:2008 and ISO 14001:2004
- Seismic certification – optional
  - 2015 IBC certification
- UL 2200 – optional (refer to *System ratings* for availability)
- CSA – optional
  - CSA C22.2 No. 100
  - CSA C22.2 No. 14
- Performance Assurance Certification (PAC)
  - Generator set tested to ISO 8528-5 for transient response
  - Verified product design, quality and performance integrity
  - All engine systems are prototype and factory tested
- Power rating
  - Accepts rated load in one step per NFPA 110

A Rolls-Royce solution

Standard features*

- Single source supplier
- Global product support
- Two (2) Year/3,000 Hour Basic Limited Warranty
- 4045TF290J diesel engine
  - 4.5 liter displacement
  - Mechanical injection pump
  - 4-cycle
- Engine-generator resilient mounted
- Complete range of accessories
- Cooling system
  - Integral set-mounted
  - Engine-driven fan
- Generator
  - Brushless, rotating field generator
  - 2/3 pitch windings
  - 300% short circuit capability with optional Permanent Magnet Generator (PMG)
- Digital control panel(s)
  - UL recognized, CSA certified, NFPA 110
  - Complete system metering
  - LCD display

Standard equipment*

Engine

- Air cleaners
- Oil pump
- Oil drain extension and shut-off valve
- Full flow oil filter
- Fuel filter with water seperator
- Jacket water pump
- Thermostat
- Blower fan and fan drive
- Radiator - unit mounted
- Electric starting motor - 12V
- Governor - mechanical droop
- Base - formed steel
- SAE flywheel and bell housing
- Charging alternator - 12V
- Battery box and cables
- Flexible fuel connectors
- Flexible exhaust connection
- EPA certified engine

Generator

- NEMA MG1, IEEE, and ANSI standards compliance for temperature rise and motor starting
- Self-ventilated and drip-proof
- Superior voltage waveform
- Solid state, volts-per-hertz regulator
- ± 1% voltage regulation no load to full load
- Brushless alternator with brushless pilot exciter
- 4 pole, rotating field
- 130 °C maximum standby temperature rise
- 1-bearing, sealed
- Flexible coupling
- Full amortisseur windings
- 125% rotor balancing
- 3-phase voltage sensing
- 100% of rated load - one step
- 5% maximum total harmonic distortion

Digital control panel(s)

- Digital metering
- Engine parameters
- Generator protection functions
- Engine protection
- Windows®-based software
- Multilingual capability
- Communications to remote annunciator
- Programmable input and output contacts
- UL recognized, CSA certified, CE approved
- Event recording
- IP 54 front panel rating with integrated gasket
- NFPA 110 compatible

* Represents standard product only. Consult the factory/***mtu*** Distributor for additional configurations.

Application data

Engine

Manufacturer	John Deere
Model	4045TF290J
Type	4-cycle
Arrangement	4-inline
Displacement: L (in^3)	4.5 (275)
Bore: cm (in)	10.6 (4.19)
Stroke: cm (in)	12.7 (5)
Compression ratio	19:1
Rated rpm	1,800
Engine governor	mechanical droop
Maximum power: kWm (bhp)	55 (74)
Steady state frequency band	± 0.5%
Air cleaner	dry

Liquid capacity

Total oil system: L (gal)	13 (3.4)
Engine jacket water capacity: L (gal)	8.5 (2.3)
System coolant capacity: L (gal)	18.9 (5)

Electrical

Electric volts DC	12
Cold cranking amps under -17.8 °C (0 °F)	925
Batteries: group size	31
Batteries: quantity	1

Fuel system

Fuel supply connection size	3/8” NPT
Fuel return connection size	3/8” NPT
Maximum fuel lift: m (ft)	1.8 (6)
Recommended fuel	diesel #2
Total fuel flow: L/hr (gal/hr)	112.8 (29.8)

Fuel consumption

At 100% of power rating: L/hr (gal/hr)	15.8 (4.2)
At 75% of power rating: L/hr (gal/hr)	12.3 (3.3)
At 50% of power rating: L/hr (gal/hr)	8.1 (2.1)

Cooling - radiator system

Ambient capacity of radiator: °C (°F)	50 (122)
Maximum restriction of cooling air: intake and discharge side of radiator: kPa (in. H_20)	0.12 (0.5)
Water pump capacity: L/min (gpm)	144 (38)
Heat rejection to coolant: kW (BTUM)	31 (1,765)
Heat radiated to ambient: kW (BTUM)	6.8 (384)
Fan power: kW (hp)	1.6 (2.2)

Air requirements

Aspirating: *m^3/min (SCFM)	4.5 (159)
Air flow required for radiator cooled unit: *m^3/min (SCFM)	117 (4,088)
Remote cooled applications; air flow required for dissipation of radiated generator set heat for a maximum of 25 °F rise: *m^3/min (SCFM)	25 (867)

* Air density = 1.184 kg/m^3 (0.0739 lbm/ft^3)

Exhaust system

Gas temperature (stack): °C (°F)	537 (999)
Gas volume at stack temperature: m^3/min (CFM)	12.7 (448)
Maximum allowable back pressure at outlet of engine, before piping: kPa (in. H_20)	7.5 (30)
Minimum allowable back pressure at outlet of engine, before piping: kPa (in. H_20)	N/A

Weights and dimensions

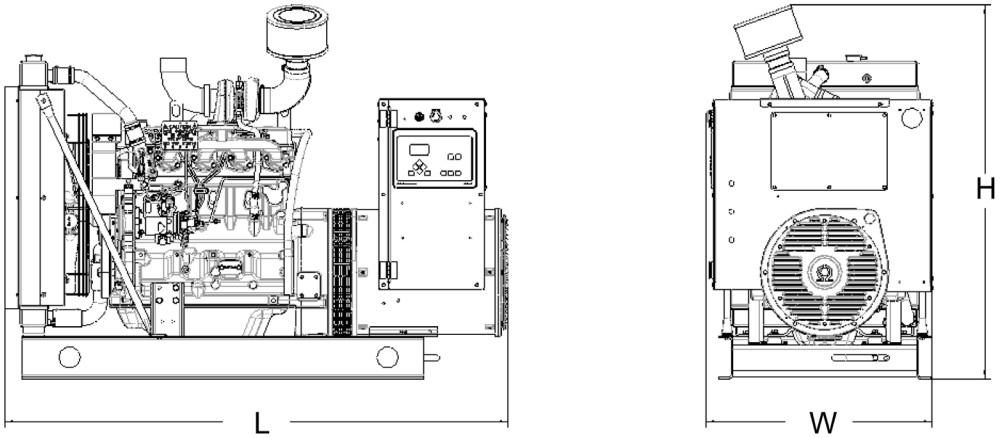

Drawing above for illustration purposes only, based on standard open power 480 volt generator set. Lengths may vary with other voltages. Do not use for installation design. See website for unit specific template drawings.

System	Dimensions (L x W x H)	Weight
Open Power Unit (OPU)	1,781 x 800 x 1,321 mm (70.1 x 31.5 x 52 in)	943-1,404 kg (2,078-3,095 lb)

Weights and dimensions are based on open power units and are estimates only. Consult the factory for accurate weights and dimensions for your specific generator set.

Sound data

Unit type	Standby full load
Level 0 (OPU): dB(A)	80.5

Sound data is provided at 7 m (23 ft). Generator set tested in accordance with ISO 8528-10 and with infinite exhaust.

Emissions data

NO_x + NMHC	CO	PM
3.3	N/A	0.12

All units are in g/hp-hr and shown at 100% load (not comparable to EPA weighted cycle values). Emission levels of the engine may vary with ambient temperature, barometric pressure, humidity, fuel type and quality, installation parameters, measuring instrumentation, etc. The data was obtained in compliance with US EPA regulations. The weighted cycle value (not shown) from each engine is guaranteed to be within the US EPA standards. 5-mode emission data per 40 CFR 89 or 40 CFR 1039 (as applicable) is available upon request.

Rating definitions and conditions

- Standby ratings apply to installations served by a reliable utility source. The standby rating is applicable to varying loads for the duration of a power outage. No overload capability for this rating. Ratings are in accordance with ISO 3046-1, BS 5514, and AS 2789. Average load factor: ≤ 85%.
- Nominal ratings at standard conditions: 25 °C and 300 meters (77 °F and 1,000 feet).
- Deration factor:
  - Consult your local ***mtu*** Distributor for altitude derations.
  - Consult your local ***mtu*** Distributor for temperature derations.

N/A = Not Available

Subject to change. | 231041 | 2021-05