Diesel Generator Set

# *mtu* 12V1600 DS650

## 590 kVA/50 Hz/Prime (Fuel-Optimized)/380 - 415V
## Reference *mtu* 12V1600 DS650 (650 kVA Fuel-Optimized) for Standby Rating Technical Data

### System ratings **

| Voltage (L-L) | 380V | 400V | 415V |
|---|---|---|---|
| Phase | 3 | 3 | 3 |
| PF | 0.8 | 0.8 | 0.8 |
| Hz | 50 | 50 | 50 |
| kW | 472 | 472 | 472 |
| kVA | 590 | 590 | 590 |
| Amps | 896 | 852 | 821 |
| skVA@30% voltage dip | 1,050 | 1,200 | 1,750 |
| Generator model | 573RSL4033 | 573RSL4033 | 573RSL4035 |
| Temp rise | 125 °C/40 °C | 125 °C/40 °C | 125 °C/40 °C |
| Connection | 4 LEAD WYE | 4 LEAD WYE | 4 LEAD WYE |

** Prime technical data is for a fuel-optimized prime unit.

### Certifications and standards

- Generator set is designed and manufactured in facilities certified to standards ISO 9001:2008 and ISO 14001:2004
- Seismic certification – optional
  - 2018 IBC certification
  - OSHPD pre-approval
- Performance Assurance Certification (PAC)
  - Generator set tested to ISO 8528-5 for transient response
  - Verified product design, quality, and performance integrity
  - All engine systems are prototype and factory tested
- Power rating
  - Accepts rated load in one step per NFPA 110
  - Permissible average power output during 24 hours of operation is approved up to 75%.

A Rolls-Royce solution

## Standard features*

- Single source supplier
- Global product support
- Two (2) Year/3,000 Hour Basic Limited Warranty
- 12V1600 diesel engine
  - 21.0 liter displacement
  - Common rail fuel injection
  - 4-cycle
- Complete range of accessories
- Cooling system
  - Integral set-mounted
  - Engine-driven fan
- Generator
  - Brushless, rotating field generator
  - 2/3 pitch windings
  - Permanent Magnet Generator (PMG) supply to regulator
  - 250% short circuit capability
- Digital control panel(s)
  - UL recognized, CSA certified, NFPA 110
  - Complete system metering
  - LCD display

## Standard equipment*

### Engine

- Air cleaners
- Oil pump
- Oil drain extension and shut-off valve
- Full flow oil filter
- Closed crankcase ventilation
- Jacket water pump
- Thermostats
- Blower fan and fan drive
- Radiator - unit mounted
- Electric starting motor - 24V
- Governor - electronic isochronous
- Base - formed steel
- SAE flywheel and bell housing
- Charging alternator - 24V
- Battery box and cables
- Flexible fuel connectors
- Flexible exhaust connection

### Generator

- NEMA MG1, IEEE, and ANSI standards compliance for temperature rise and motor starting
- Sustained short circuit current of up to 250% of the rated current for up to 10 seconds
- Self-ventilated
- Superior voltage waveform
- Digital, solid state, volts-per-hertz regulator
- Brushless alternator with brushless pilot exciter
- 4 pole, rotating field
- 105 °C maximum prime temperature rise
- 1-bearing, sealed
- Flexible coupling
- Full amortisseur windings
- 125% rotor balancing
- 3-phase voltage sensing
- ± 0.25% voltage regulation no load to full load
- 100% of rated load - one step
- 5% maximum total harmonic distortion

### Digital control panel(s)

- Digital metering
- Engine parameters
- Generator protection functions
- Engine protection
- CANBus ECU communications
- Windows®-based software
- Multilingual capability
- Communications to remote annunciator
- Programmable input and output contacts
- UL recognized, CSA certified, CE approved
- Event recording
- IP 54 front panel rating with integrated gasket
- NFPA 110 compatible

* Represents standard product only. Consult the factory/***mtu*** Distributor for additional configurations.

# Application data

## Engine

| | |
|---|---|
| Manufacturer | ***mtu*** |
| Model ** | 12V1600G10F |
| Type | 4-cycle |
| Arrangement | 12-V |
| Displacement: L (cu in) | 21.0 (1,281) |
| Bore: cm (in) | 12 (4.72) |
| Stroke: cm (in) | 15 (5.91) |
| Compression ratio | 17.5:1 |
| Rated rpm | 1,500 |
| Engine governor | electronic isochronous (ADEC) |
| Maximum power: kWm (bhp) ** | 524 (703) |
| Steady state frequency band | ± 0.25% |
| Air cleaner | dry |

## Liquid capacity

| | |
|---|---|
| Total oil system: L (gal) | 73 (19.3) |
| Engine jacket water capacity: L (gal) | 65 (17.2) |
| System coolant capacity: L (gal) | 106 (28.1) |

## Electrical

| | |
|---|---|
| Electric volts DC | 24 |
| Cold cranking amps under -17.8 °C (0 °F) | 1,050 |
| Batteries: group size | 4D |
| Batteries: quantity | 2 |

## Fuel system

| | |
|---|---|
| Fuel supply connection size | -10 JIC 37° female<br>M20 x 1.5 male adapter provided |
| Fuel return connection size | -6 JIC 37° female<br>M14 x 1.5 male adapter provided |
| Maximum fuel lift: m (ft) | 5 (16) |
| Recommended fuel | diesel #2 |
| Total fuel flow: L/hr (gal/hr) | 341.8 (90.3) |

## Fuel consumption **

| | |
|---|---|
| At 100% of power rating: L/hr (gal/hr) | 118 (31.2) |
| At 75% of power rating: L/hr (gal/hr) | 92 (24.3) |
| At 50% of power rating: L/hr (gal/hr) | 64 (16.8) |

## Cooling - radiator system **

| | |
|---|---|
| Ambient capacity of radiator: °C (°F) | 50 (122) |
| Maximum restriction of cooling air: intake and discharge side of radiator: kPa (in. $H_2O$) | 0.2 (0.8) |
| Water pump capacity: L/min (gpm) | 433 (115) |
| Heat rejection to coolant: kW (BTUM) | 231 (13,136) |
| Heat rejection to after cooler: kW (BTUM) | 87 (4,947) |
| Heat radiated to ambient: kW (BTUM) | 53.5 (3,042) |
| Fan power: kW (hp) | 25.4 (34) |

## Air requirements **

| | |
|---|---|
| Aspirating: *$m^3$/min (SCFM) | 36 (1,271) |
| Air flow required for radiator cooled unit: *$m^3$/min (SCFM) | 803 (28,350) |
| Remote cooled applications; air flow required for dissipation of radiated generator set heat for a maximum of 25 °F rise: *$m^3$/min (SCFM) | 194 (6,861) |

* Air density = 1.184 kg/$m^3$ (0.0739 lbm/$ft^3$)

## Exhaust system **

| | |
|---|---|
| Gas temperature (stack): °C (°F) | 482 (900) |
| Gas volume at stack temperature: $m^3$/min (CFM) | 90 (3,178) |
| Maximum allowable back pressure at outlet of engine, before piping: kPa (in. $H_2O$) | 8.5 (34.1) |

** Prime technical data is for a fuel-optimized prime unit.

## Weights and dimensions

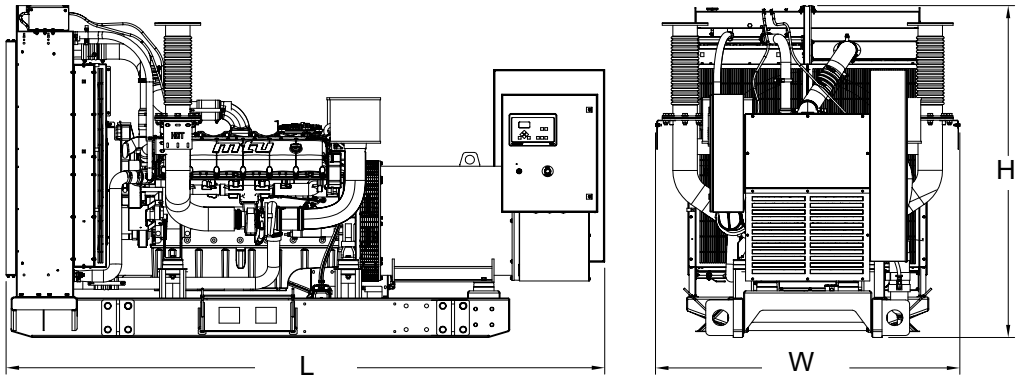


Drawing above for illustration purposes only, based on standard open power 400 volt generator set. Lengths may vary with other voltages. Do not use for installation design. See website for unit specific template drawings.

| System | Dimensions (L x W x H) | Weight |
|---|---|---|
| Open Power Unit (OPU) | 3,737 x 1,899 x 2,137 mm (147.1 x 74.8 x 84.1 in) | 5,249 kg (11,572 lb) |

Weights and dimensions are based on open power units and are estimates only. Consult the factory for accurate weights and dimensions for your specific generator set.

## Sound data

| Unit type | Prime full load |
|---|---|
| Level 0 (OPU): dB(A) | C/F |

Sound data is provided at 7 m (23 ft). Generator set tested in accordance with ISO 8528-10 and with infinite exhaust.

## Emissions data

| $NO_x$ + NMHC | CO | PM |
|---|---|---|
| C/F | C/F | C/F |

## Rating definitions and conditions

- Prime power ratings apply to installations where utility power is unavailable or unreliable. At varying load, the number of generator set operating hours is unlimited. A 10% overload capacity is available for one hour in twelve. Ratings are in accordance with ISO 8528-1, ISO 3046-1, BS 5514, and AS 2789. Average load factor: ≤ 75%.
- Nominal ratings at standard conditions: 25 °C and 300 meters (77 °F and 1,000 feet).
- Deration factor:
  - Consult your local ***mtu*** Distributor for altitude derations.
  - Consult your local ***mtu*** Distributor for temperature derations.

C/F = Consult Factory/***mtu*** Distributor
N/A = Not Available

Subject to change. | 23567 | 2021-05