Diesel Generator Set

# MTU 4R0080 DS33

## 400 – 230 V/30 kVA/50 Hz/prime power
## 400 – 230 V/33 kVA/50 Hz/standby power
## IVECO – F32 AM 1A

Optional equipment and finishing shown. Standard may vary.

## Product highlights

### Benefits
- Low fuel consumtion
- Emissions optimizations available
- High availability and reliability
- Outstanding load acceptance
- Long maintenance intervals

### Support
- Global product support offered

### Standards
- Engine-generator set is designed and manufactured in facilities certified to standards ISO 2008:9001
- Generator set complies to ISO 8528 and fullfills performance level G2
- Generator meets BS5000; NEMA MG 1; ISO; DIN EN and IEC standards
- NFPA 110

### Available emissions optimizations
- Exhaust emission EU 97/68 EC Stage II compliant

### Wide standard scope of supply
- 4P circuit breaker
- Island operation control panel
- Integrated fuel tank
- Industrial silencer (15 dB(A))
- Batteries & battery charger

### Complete range of accessories available
- Sound attenuated enclosure
- Fuel system accessories
- Control panel & ATS
- Range of additional electronical options

### Warranty
- Standard 36 months warranty after shipment

A Rolls-Royce solution

## Application data

### Engine

| | |
|---|---|
| Manufacturer | IVECO |
| Model | F32 AM 1A |
| Type | 4-cycle |
| Arrangement | 4-L |
| Displacement: L | 3.2 |
| Bore: mm | 99 |
| Stroke: mm | 104 |
| Compression ratio | 17.1 |
| Rated rpm | 1500 |
| Engine governor | mechanical |
| Gross power: kWm (prime/standby) | 29/32 |
| Air cleaner | dry |

### Fuel system

| | |
|---|---|
| Fuel tank capacity: OPU (EPU) in l | 120 (100) |
| Autonomy: hr | 18 |

### Fuel consumption

| | l/hr |
|---|---|
| At standby power rating: | 9.6 |
| At 100% of power rating: | 8.3 |
| At 50% of power rating: | 4.3 |

### Liquid capacity

| | |
|---|---|
| Total oil system: l | 10.5 |
| Total coolant capacity: l | 19.27 |

### Generator

| | |
|---|---|
| Generator brand | Mecc-Alte |
| Generator type | HM160C1N |
| Insulation class | H-class |
| Bearing | single bearing |
| Enclosure | IP23 |
| Voltage regulation | A.V.R. (electronic) |
| Exciting system | self-excited, brushless |

### Electrical

| | |
|---|---|
| Electric system volts DC | 12 |
| Battery capacity: Ah | 100 |

### Air requirements [1]

| | |
|---|---|
| Aspirating: $m^3$/hr | 112 |
| Cooling air flow: $m^3$/s | 1.4 |

### Exhaust system

| | |
|---|---|
| Gas temp. (stack)[2]: °C | 400 |
| Gas volume at stack temp.[3]: kg/hr | 152 |
| Maximum allowable back pressure: kPa | 5 |

### Cooling/radiator system

| | |
|---|---|
| Ambient capacity of radiator: OPU (EPU) in °C | 50 (40) |
| Fan power consumption: kWm | 0.5 |

## Standard and optional features

### System ratings (kW/kVA)

| | MTU 4R0080 DS33 | MTU 4R0080 DS33 |
|---|---|---|
| | Prime operation | Standby operation |
| Voltage | 400 V | 400 V |
| Phase | Three phase | Three phase |
| Hz | 50 | 50 |
| kWel* | 24.0 | 26.4 |
| kVA** | 30 | 33 |
| Rated AMPS | 43.3 | 47.6 |

* cos phi = 1.0
** cos phi = 0.8 Also available for following voltages 380V & 415V - for details please contact your local MTU dealer.

1 Technical data is for 100% power.
2 Technical data is for prime power.
3 Technical data is for standby power.

# Standard and optional features

## Engine

- ■ 4- strokes diesel engine
- ■ Flywheel housing SAE 3
- ■ Flywheel 11 1/2”
- ■ Oil pan
- ■ Lube oil circulation pump
- ■ Lube oil filter
- ■ Dry exhaust manifolds
- ■ Hot components and radiator guards
- ■ Mobile components guards
- ☐ Electronic engine regulat

## Fuel system

- ■ Fuel filter with water-separator
- ■ Direct fuel injection system
- ☐ Automatic fuel transfer pump
- ☐ Heavy-duty fuel pre-filter with water seperator
- ☐ 3-way valve for fuel filling
- ■ Integrated fuel tank (level sensor and drain cap incl.)

## Generator

- ■ 3-Phase, syncronos, brushless, self exciting, self regulating, self ventilating alternator
- ■ IP23 protection degree
- ☐ Winding temperature sensors
- ■ Insulation class H
- ☐ Anti condensation

## Control panel & electric options

- ■ Control and power electric panel, with measurements devices and contoller
- ☐ ATS (Automatic Transfer Switch)
- ☐ Control version for parallel operation
- ☐ Control version for synchronizing a single genset with mains
- ☐ Programmable timer for MM7 and MC7
- ☐ Remote display
- ☐ Expansion module for CAN communication
- ☐ Change over power supply for MC7
- ☐ Input Output/LED expansion modules for DeepSea controllers
- ☐ ModBus connection to customer systems TCP/IP
- ☐ Control version for synchronizing with mains without blackout
- ☐ Converter kits CAN to RS485/USB/LAN

## Circuit breaker/power distribution

- ■ 4 poles manual circuit breaker (motorized with DeepSea controllers)

## Starting/Charging System

- ■ 12V electric system
- ■ Starting batteries installed
- ■ Pre-heating resistance/jacket water heater
- ■ Battery charging alternator
- ☐ Battery disconnector
- ■ Battery charger

## Air Intake System

- ■ Dry-type air filter
- ☐ Heavy duty air filter with automatic dust evacuation

■ Represents standard features

☐ Represents optional features

# Standard and optional features

### Exhaust system

- ■ Industrial silencer 15 dB(A)
- ☐ Residential silencer 35 dB(A)

### Cooling system

- ■ Coolant circulation pump
- ■ Front type radiator for jacket water
- ■ Engine mounted fan drive

### Mounting system

- ■ Mounted on steel base frame
- ■ Resilent mounting of engine and generator

### Enclosures

- ☐ Sound proof enclosure
- ☐ Socket box
- ☐ Increased fuel tank capacity

### Documentation & certifications

- ■ Genset & component manuals
- ■ Maintaince schedule
- ☐ CE-certification for EU
- ■ Fluids and lubricants specification

■ Represents standard features
☐ Represents optional features

## Weights and dimensions

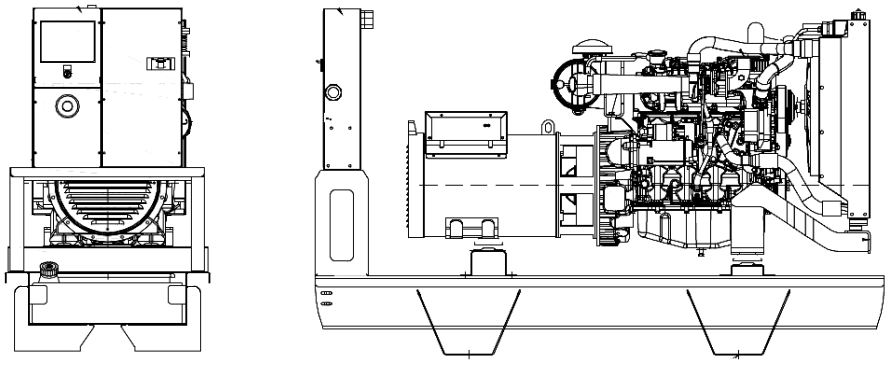

Drawing above for illustration purposes only, based on a standard open power 400 Volt engine-generator set. Lengths may vary with other voltages. Do not use for installation design. See website for unit specific template drawings.

| System | Dimensions (L x W x H) | Weight (wet/with standard accessories) |
|---|---|---|
| Open power unit (OPU) | 1850 x 780 x 1500 mm | 661 kg |
| Enclosed power unit | 2100 x 975 x 1349 mm | 991 kg |

Consult the factory for accurate weights and dimensions for your specific engine-generator set. Lengths may vary with other voltages. Do not use for installation design.

## Sound data

| Unit type | |
|---|---|
| Open power unit: dB(A) | on request |
| Enclosed power unit: dB(A) | 68 |

According to 2000/14/CE.
Sound data is provided at 7m for 75% prime power.

## Rating definitions and conditions

- Prime power ratings apply to installations where utility power is unavailable or unreliable. At varying load, the number of generator set operating hours is unlimited. A 10% overload capacity is available for one hour in twelve. Ratings are in accordance with ISO 8528-1, ISO 3046-1, BS 5514, AS 2789 and DIN 6271. Average load factor: < 75%.
- Standby ratings apply to installations served by a reliable utility source. The standby rating is applicable to varying loads for the duration of a power outage. No overload capability for this rating. Ratings are in accordance with ISO 8528-1, ISO 3046-1, BS 5514, AS 2789 and DIN 6271. Average load factor: < 85%, max. 500h/year.
- Consult your local MTU distributor for derating information.

  Rated power for reference conditions at 25°C and 100m above sea level.

Subject to change. | 3238051 | Edition 01/20 | ESM 2020-03.