Diesel Generator Set

MTU 4R0113 DS63

400 – 230 V/60 kVA/50 Hz/prime power
400 – 230 V/63 kVA/50 Hz/standby power
IVECO – NEF45 SM 1A

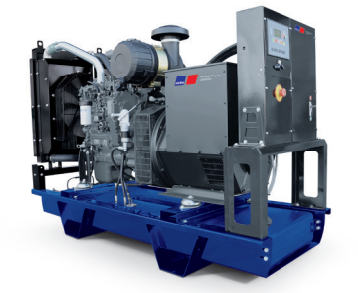

Optional equipment and finishing shown. Standard may vary.

Product highlights

Benefits
- Low fuel consumtion
- Emissions optimizations available
- High availability and reliability
- Outstanding load acceptance
- Long maintenance intervals

Support
- Global product support offered

Standards
- Engine-generator set is designed and manufactured in facilities certified to standards ISO 2008:9001
- Generator set complies to ISO 8528 and fullfills performance level G2
- Generator meets BS5000; NEMA MG 1; ISO; DIN EN and IEC standards
- NFPA 110

Available emissions optimizations
- Exhaust emission EU 97/68 EC Stage II
- Fuel optimized

Wide standard scope of supply
- 4P circuit breaker
- Island operation control panel
- Integrated fuel tank
- Industrial silencer (15 dB(A))
- Batteries & battery charger

Complete range of accessories available
- Sound attenuated enclosure
- Fuel system accessories
- Control panel & ATS
- Range of additional electronical options

Warranty
- Standard 36 months warranty after shipment

A Rolls-Royce solution

Application data

Engine

Manufacturer	IVECO
Model	NEF45 SM 1A
Type	4-cycle
Arrangement	4-L
Displacement: L	4.5
Bore: mm	104
Stroke: mm	132
Compression ratio	17.5
Rated rpm	1500
Engine governor	mechanical
Gross power: kWm (prime/standby)	54.5/60
Air cleaner	dry

Fuel system

Fuel tank capacity: OPU (EPU) in l	145 (288)
Autonomy: hr	14

Fuel consumption

	l/hr
At standby power rating:	15
At 100% of power rating:	13.7
At 50% of power rating:	7

Liquid capacity

Total oil system: l	12.8
Total coolant capacity: l	18.5

Generator

Generator brand	Mecc-Alte
Generator type	HM200B1N
Insulation class	H-class
Bearing	single bearing
Enclosure	IP23 M
Voltage regulation	A.V.R. (electronic)
Exciting system	self-excited, brushless

Electrical

Electric system volts DC	12
Battery capacity: Ah	100

Air requirements [1]

Aspirating: m^3/hr	377
Cooling air flow: m^3/s	1.86

Exhaust system

Gas temp. (stack)[2]: °C	548
Gas volume at stack temp.[3]: kg/h	325
Maximum allowable back pressure: kPa	5

Cooling/radiator system

Ambient capacity of radiator: OPU (EPU) in °C	50 (40)
Fan power consumption: kWm	1.3

Standard and optional features

System ratings (kW/kVA)

	MTU 4R0113 DS63	MTU 4R0113 DS63
	Prime operation	Standby operation
Voltage	400 V	400 V
Phase	Three phase	Three phase
Hz	50	50
kWel*	48.0	50.4
kVA**	60	63
Rated AMPS	86.6	90.9

* cos phi = 1.0
** cos phi = 0.8 Also available for following voltages 380V & 415V - for details please contact your local MTU dealer.

1 Technical data is for 100% power.
2 Technical data is for prime power.
3 Technical data is for standby power.

Standard and optional features

Engine

- ■ 4- strokes diesel engine
- ■ Flywheel housing SAE 3
- ■ Flywheel 11 1/2”
- ■ Oil pan
- ■ Lube oil circulation pump
- ■ Lube oil filter
- ■ Dry exhaust manifolds
- ■ Hot components and radiator guards
- ■ Mobile components guards
- ☐ Electronic engine regulat

Fuel system

- ■ Fuel filter with water-separator
- ■ Direct fuel injection system
- ☐ Automatic fuel transfer pump
- ☐ Heavy-duty fuel pre-filter with water seperator
- ☐ 3-way valve for fuel filling
- ■ Integrated fuel tank (level sensor and drain cap incl.)

Generator

- ■ 3-Phase, syncronos, brushless, self exciting, self regulating, self ventilating alternator
- ■ IP23 M protection degree
- ☐ IP23 protection cover
- ☐ Winding temperature sensors
- ■ Insulation class H
- ☐ Anti condensation

Control panel & electric options

- ■ Control and power electric panel, with measurements devices and contoller
- ☐ ATS (Automatic Transfer Switch)
- ☐ Control version for parallel operation
- ☐ Control version for synchronizing a single genset with mains
- ☐ Programmable timer for MM7 and MC7
- ☐ Remote display
- ☐ Expansion module for CAN communication
- ☐ Change over power supply for MC7
- ☐ Input Output/LED expansion modules for DeepSea controllers
- ☐ ModBus connection to customer systems TCP/IP
- ☐ Control version for synchronizing with mains without blackout
- ☐ Converter kits CAN to RS485/USB/LAN

Circuit breaker/power distribution

- ■ 4 poles manual circuit breaker (motorized with DeepSea controllers)

Starting/charging System

- ■ 12V electric system
- ■ Starting batteries installed
- ■ Pre-heating resistance/jacket water heater
- ■ Battery charging alternator
- ☐ Battery disconnector
- ■ Battery charger

Air intake system

- ■ Dry-type air filter
- ☐ Heavy duty air filter with automatic dust evacuation

■ Represents standard features

☐ Represents optional features

Standard and optional features

Exhaust system

- ■ Industrial silencer 15 dB(A)
- ☐ Residential silencer 35 dB(A)

Cooling system

- ■ Coolant circulation pump
- ■ Front type radiator for jacket water
- ■ Engine mounted fan drive

Mounting system

- ■ Mounted on steel base frame
- ■ Resilent mounting of engine and generator

Enclosures

- ☐ Sound proof enclosure
- ☐ Socket box
- ☐ Increased fuel tank capacity

Documentation & certifications

- ■ Genset & component manuals
- ■ Maintaince schedule
- ☐ CE-certification for EU
- ■ Fluids and lubricants specification

■ Represents standard features
☐ Represents optional features

Weights and dimensions

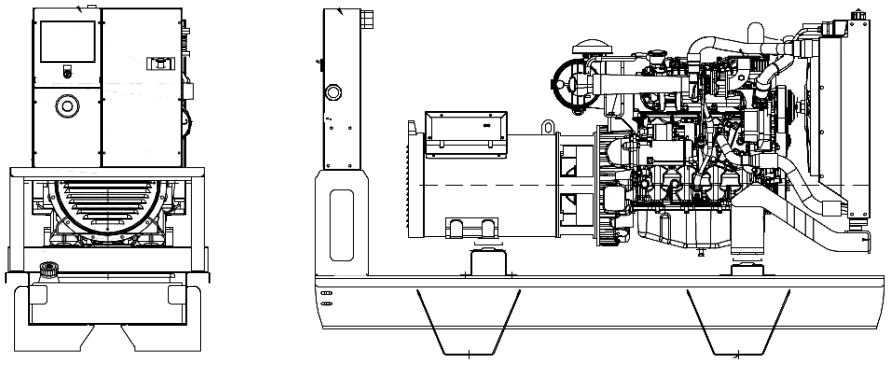

Drawing above for illustration purposes only, based on a standard open power 400 Volt engine-generator set. Lengths may vary with other voltages. Do not use for installation design. See website for unit specific template drawings.

System	Dimensions (L x W x H)	Weight (wet/with standard accessories)
Open power unit (OPU)	2150 x 780 x 1500 mm	948 kg
Enclosed power unit	2750 x 1100 x 1760 mm	1538 kg

Consult the factory for accurate weights and dimensions for your specific engine-generator set. Lengths may vary with other voltages. Do not use for installation design.

Sound data

Unit type	
Open power unit: dB(A)	on request
Enclosed power unit: dB(A)	69

According to 2000/14/CE.
Sound data is provided at 7m for 75% prime power.

Rating definitions and conditions

- Prime power ratings apply to installations where utility power is unavailable or unreliable. At varying load, the number of generator set operating hours is unlimited. A 10% overload capacity is available for one hour in twelve. Ratings are in accordance with ISO 8528-1, ISO 3046-1, BS 5514, AS 2789 and DIN 6271. Average load factor: < 75%.
- Standby ratings apply to installations served by a reliable utility source. The standby rating is applicable to varying loads for the duration of a power outage. No overload capability for this rating. Ratings are in accordance with ISO 8528-1, ISO 3046-1, BS 5514, AS 2789 and DIN 6271. Average load factor: < 85%, max. 500h/year.
- Consult your local MTU distributor for derating information.

  Rated power for reference conditions at 25°C and 100m above sea level.

Subject to change. | 3238071 | Edition 01/20 | ESM 2020-03.