Diesel Generator Set

MTU 16V2000 DS1250

380V - 415V/50 Hz/prime/fuel consumption optimized/ NOx emission optimized/16V2000G36F/air charge air cooling

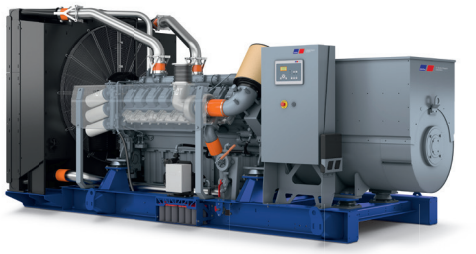

Optional equipment and finishing shown. Standard may vary.

Product highlights

Benefits
- Low fuel consumption
- Optimized system integration ability
- High reliability and availability of power
- Long maintenance intervals
- Optimized ratio between size and power
- Wide operating range without derating

Support
- Global product support offered

Standards
- Engine-generator set is designed and manufactured in facilities certified to standards ISO 2008:9001 and ISO 2004:14001
- Generator set complies to G3 according to ISO 8528
- Generator meets NEMA MG1, BS5000, ISO, DIN EN and IEC standards
- NFPA 110

Power rating
- System rating: 1135 kVA
- Accepts rated load in one step per NFPA 110
- Generator set complies to G3 according to ISO 8528-5
- Generator set exceeds load steps according to ISO 8528-5

Performance assurance certification (PAC)
- Engine-generator set tested to ISO 8528-5 for transient response
- 75% load factor for prime power applications
- Verified product design, quality and performance integrity
- All engine systems are prototype and factory tested

Complete range of accessories available
- Control panel
- Power panel
- Fuel system
- Fuel connections with shut-off valve mounted to base frame
- Starting/charging system
- Exhaust system
- Mechanical radiator
- Oversized voltage alternators

Emissions
- Fuel consumption optimized
- NOx emission optimized, Tier 2 compliant and NEA (ORDE) optimization optionally available

Certifications
- CE certification option
- VDE4110 certification

A Rolls-Royce solution

Application data [1]

Engine	Fuel consump. opt.	Emission opt. [2]
Manufacturer	MTU	MTU
Model	16V2000G36F	16V2000G36F
Type	4-cycle	4-cycle
Arrangement	16V	16V
Displacement: l	35.7	35.7
Bore: mm	135	135
Stroke: mm	156	156
Compression ratio	17.5	17.5
Rated speed: rpm	1500	1500
Engine governor	ADEC (ECU 9)	ADEC (ECU 9)
Speed regulation	± 0.25%	± 0.25%
Max power: kWm	1000	1000
Mean effective pressure: bar	22.4	22.4
Air cleaner	dry	dry

Fuel system		
Maximum fuel lift: m	5	5
Total fuel flow: l/min	30	30

Fuel consumption [3]				
At 100% of power rating:	l/hr	g/kWh	231/192	242/201
At 75% of power rating:	l/hr	g/kWh	173/192	183/203
At 50% of power rating:	l/hr	g/kWh	120/199	127/210

Lube oil system		
Total oil system capacity: l	102	102
Max. lube oil temp. (alarm): °C	103	103
Max. lube oil temp. (shutdown): °C	105	105
Min. lube oil pressure (alarm): bar	4.5	4.5
Min. lube oil pressure (shutdown): bar	4	4

Combustion air requirements		
Combustion air volume: m^3/s	1.17	1.24
Max. air intake restriction: mbar	40	40

Cooling/radiator system	Fuel consump. opt.	Emission opt. [2]
Coolant flow rate (HT circuit): m^3/hr	41.6	41.6
Heat rejection to coolant: kW	395	375
Heat radiated to charge air cooling: kW	190	250
Heat radiated to ambient: kW	40	40
Fan power for mech. radiator (40°C):	43.4	43.4
Fan power for mech. radiator (50°C):	43.4	43.4
Air flow required for mech. radiator (40°C) cooled unit: m^3/min	1462	1462
Air flow required for mech. radiator (50°C) cooled unit: m^3/min	1462	1462
Engine coolant capacity (without cooling equipment): l	70	70
Radiator coolant capacity (40°C): l	74	74
Radiator coolant capacity (50°C): l	104	104
Max. coolant temperature (warning): °C	102	102
Max. coolant temperature (shutdown): °C	105	105

Exhaust system		
Exhaust gas temp. (after turbocharger): °C	530	520
Exhaust gas volume: m^3/s	3.12	3.37
Maximum allowable back pressure: mbar	50	50
Minimum allowable back pressure: mbar	30	30

Generator		
Protection class	IP23	IP23
Insulation class	H	H
Voltage regulation (steady state)	± 0.25%	± 0.25%
Rado interference class	N	N

1 All data refers only to the engine and is based on ISO standard conditions (25°C and 100m above sea level).

2 Emission optimized data refer to NOx emission optimized and NEA (ORDE) optimized/Tier 2 compliant engines.

3 Values referenced are in accordance with ISO 3046-1. Conversion calculated with fuel density of 0.83 g/ml. All fuel consumption values refer to rated engine power.

Standard and optional features

System ratings (kW/kVA)

Generator model	Voltage	with mechanical radiator**		
		kWel	kVA*	AMPS
Leroy Somer LSA 50.2 M6 (Low voltage Leroy Somer standard)	380 V	908	1135	1724
	400 V	908	1135	1638
	415 V	908	1135	1579
Leroy Somer LSA 50.2 L7 (Low voltage Leroy Somer oversized)	380 V	908	1135	1724
	400 V	908	1135	1638
	415 V	908	1135	1579
Marathon 740RSL7183 (Low voltage Marathon standard)	380 V	908	1135	1724
	400 V	908	1135	1638
	415 V	908	1135	1579
Marathon 742RSL7185 (Low voltage Marathon oversized)	380 V	908	1135	1724
	400 V	908	1135	1638
	415 V	908	1135	1579

* cos phi = 0.8
** BE, fuel optimized: max. power available up to: open power unit 40°C/400m; NOx emission optimized, EPA Tier 2 compl., NEA: standard operating conditions/open power unit 25°C/100m
Electrical outputs may vary depending on generator voltage and ambient conditions. For power outputs consult your MTU dealer.
Intake air depression/mbar: 15mbar
Exhaust back pressure/mbar: 30mbar

Engine

- ■ 4-cycle
- ■ Standard single stage air filter
- ■ Oil drain extension & shut-off valve
- ■ Full flow oil filters
- ■ Closed crankcase ventilation
- ■ Governor-electronic isochronous ADEC/ECU9
- ■ Common rail fuel injection
- ■ Dry exhaust manifold
- ■ Electric starting motor (24V)
- ■ Fuel consumption optimized engine
- ☐ NOx emission optimized engine
- ☐ Tier 2 optimized engine
- ☐ NEA (ORDE) optimized engine

Generator

- ■ Leroy Somer low voltage generator
- ■ Meets NEMA MG1, BS5000, IEC 60034-1, VDE 0530, DIN EN 12601, AS1359 and ISO 8528 requirements
- ■ Superior voltage waveform
- ■ Solid state, volts-per-Hertz regulator
- ■ 4 pole three-phase synchronous generator
- ■ Brushless, self-excited, self-regulating, self-ventilated
- ■ Digital voltage regulator
- ■ Anti condensation heater
- ■ Stator winding Y-connected, accessible neutral (brought out)
- ■ Protection IP 23
- ■ less than 5% harmonic distorsion
- ■ 2/3 pitch stator windings
- ■ No load to full load regulation
- ■ ± 0.25% voltage regulation no load to full load
- ■ Insulation class H, utilization acc. to H
- ■ Radio suppression EN55011, group 1, cl. B
- ■ Short circuit capability 3xIn for 10sec
- ■ Sustained short circuit current of up to 300% of the rated current for up to 10 seconds (Leroy Somer generator)
- ■ Winding and bearing RTDs (without monitoring)
- ■ Excitation by AREP + PMI
- ■ Mounting of CT´s: 3x 2 core CT´s
- ■ Voltage setpoint adjustment ±10V
- ☐ Sustained short circuit current of up to 250% of the rated current for up to 10 seconds (Marathon generator)
- ☐ Marathon low voltage generator
- ☐ Oversized generator

■ Represents standard features
☐ Represents optional features

Standard and optional features

Cooling system

- ■ Jacket water pump
- ■ Thermostat(s)
- ■ Air charge air cooling
- ■ Mechanical radiator
- ☐ Jacket water heater

Control Panel

- ■ Pre-wired control cabinet for easy application of customized controller (V1+)
- ☐ Island operation (V2)
- ☐ Automatic mains failure operation with ATS (V3a)
- ☐ Automatic mains failure operation incl. control of generator and mains breaker (V3b)
- ☐ Island parallel operation of multiple gensets (V4)
- ☐ Automatic mains failure operation with short (< 10s) mains parallel overlap synchronization (V5)
- ☐ Mains parallel operation of a single genset (V6)
- ☐ Mains parallel operation of multiple gensets (V7)
- ☐ Basler controller
- ☐ Deif controller
- ■ Complete system metering
- ■ Digital metering
- ■ Engine parameters
- ■ Generator protection functions
- ■ Engine protection
- ■ SAE J1939 engine ECU communications
- ■ Parametrization software
- ■ Multilingual capability
- ■ Multiple programmable contact inputs
- ■ Multiple contact outputs
- ■ Event recording
- ■ IP 54 front panel rating with integrated gasket
- ☐ Different expansion modules
- ☐ Remote annunciator
- ☐ Daytank control
- ☐ Generator winding- and bearing temperature monitoring
- ☐ Differential protection with multi-function protection relay
- ☐ Modbus TCP-IP

Power Panel

- ☐ Available in 600x600
- ☐ Phase monitoring relay 230V/400V
- ☐ Supply for battery charger
- ☐ Supply for jacket water heater
- ☐ Plug socket cabinet for 230V compatible Euro

Fuel system

- ■ Flexible fuel connectors mounted to base frame
- ☐ Fuel filter with water separator
- ☐ Switchable fuel filter with water separator
- ☐ Fuel cooler

Starting/charging system

- ■ 24V starter
- ☐ Starter batteries, cables, rack, disconnect switch
- ☐ Battery charger
- ☐ Redundant starter 2x 7.5KW

Mounting system

- ■ Welded base frame
- ■ Resilient engine and generator mounting
- ■ Modular base frame design

Exhaust system

- ☐ Exhaust bellows with connection flange
- ☐ Exhaust silencer with 10 dB(A) sound attenuation
- ☐ Exhaust silencer with 30 dB(A) sound attenuation
- ☐ Exhaust silencer with 40 dB(A) sound attenuation
- ☐ Y-connection-pipe

■ Represents standard features
☐ Represents optional features

Weights and dimensions

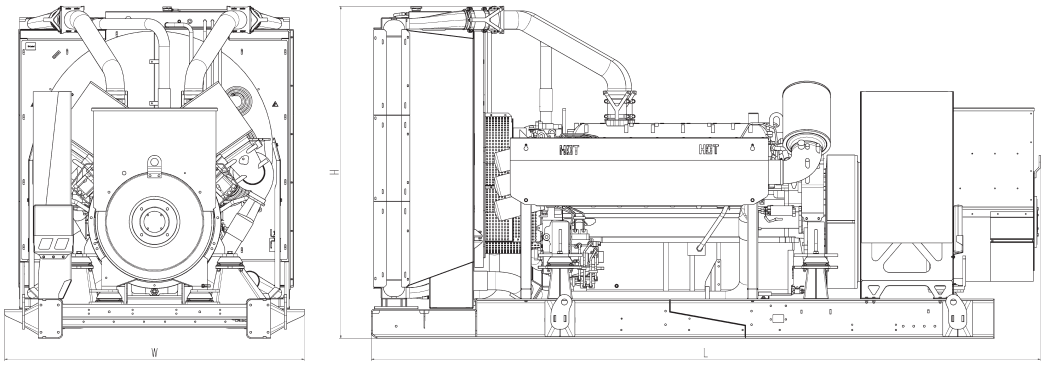

Drawing above for illustration purposes only, based on a standard open power 400 Volt engine-generator set. Lengths may vary with other voltages. Do not use for installation design. See website for unit specific template drawings.

System	Dimensions (L x W x H)	Weight (dry/less tank)
Open power unit (OPU)	4440 x 1990 x 2200 mm	7100 kg

Weights and dimensions are based on open power units and are estimates only. Consult the factory for accurate weights and dimensions for your specific engine-generator set.

Sound data

— Consult your local MTU distributor for sound data.

Emissions data

— Consult your local MTU distributor for emissions data.

Rating definitions and conditions

— Prime power ratings apply to installations where utility power is unavailable or unreliable. At varying load, the number of generator set operating hours is unlimited. A 10% overload capacity is available for one hour in twelve. Ratings are in accordance with ISO 8528-1, ISO 3046-1, BS 5514 and AS 2789.
Average load factor: ≤ 75%. Operating hours/year: unlimited
— Consult your local MTU distributor for derating information.

Subject to change. | 3239561 | Edition 02/20 | ESM 2020-09.

Rolls-Royce Group
www.mtu-solutions.com/powergen

The Rolls-Royce name, Rolls-Royce badge and Rolls-Royce monogram logos are registered Trade Marks of Rolls-Royce plc