Diesel Generator Set

# MTU 12V4000 DS2250

## 380V – 11 kV/50 Hz/standby power/fuel consumption optimized 12V4000G94F/water charge air cooling

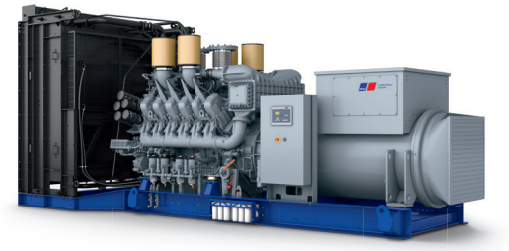

Optional equipment and finishing shown. Standard may vary.

## Product highlights

### Benefits
- Low fuel consumption
- Optimized system integration ability
- High reliability
- High availability of power
- Long maintenance intervals

### Support
- Global product support offered

### Standards
- Engine-generator set is designed and manufactured in facilities certified to standards ISO 2008:9001 and ISO 2004:14001
- Generator set complies to ISO 8528
- Generator meets NEMA MG1, BS5000, ISO, DIN EN and IEC standards
- NFPA 110

### Power rating
- System ratings: 2300 kVA
- Accepts rated load in one step per NFPA 110
- Generator set complies to G3 according to ISO 8528-5
- Generator set exceeds load steps according to ISO 8528-5

### Performance assurance certification (PAC)
- Engine-generator set tested to ISO 8528-5 for transient response
- 85% load factor
- Verified product design, quality and performance integrity
- All engine systems are prototype and factory tested

### Complete range of accessories available
- Control panel
- Power panel
- Circuit breaker/power distribution
- Fuel system
- Fuel connections with shut-off valve mounted to base frame
- Starting/charging system
- Exhaust system
- Mechanical and electrical driven radiators
- Medium and oversized voltage alternators

### Emissions
- Fuel consumption optimized

### Certifications
- CE certification option

A Rolls-Royce solution

## Application data [1]

| Engine | |
|---|---|
| Manufacturer | MTU |
| Model | 12V4000G94F |
| Type | 4-cycle |
| Arrangement | 12V |
| Displacement: l | 57.2 |
| Bore: mm | 170 |
| Stroke: mm | 210 |
| Compression ratio | 16.4 |
| Rated speed: rpm | 1500 |
| Engine governor | ECU 9 |
| Max power: kWm | 1930 |
| Air cleaner | dry |

| Fuel system | |
|---|---|
| Maximum fuel lift: m | 5 |
| Total fuel flow: l/min | 27 |

| Fuel consumption [2] | l/hr | g/kwh |
|---|---|---|
| At 100% of power rating: | 463 | 199 |
| At 75% of power rating: | 339 | 194 |
| At 50% of power rating: | 233 | 200 |

| Liquid capacity (lubrication) | |
|---|---|
| Total oil system capacity: l | 260 |
| Engine jacket water capacity: l | 160 |
| Intercooler coolant capacity: l | 40 |

| Combustion air requirements | |
|---|---|
| Combustion air volume: $m^3/s$ | 2.4 |
| Max. air intake restriction: mbar | 50 |

| Cooling/radiator system | |
|---|---|
| Coolant flow rate (HT circuit): $m^3/hr$ | 55 |
| Coolant flow rate (LT circuit): $m^3/hr$ | 30 |
| Heat rejection to coolant: kW | 790 |
| Heat radiated to charge air cooling: kW | 475 |
| Heat radiated to ambient: kW | 75 |
| Fan power for electr. radiator (40°C): kW | 55 |

| Exhaust system | |
|---|---|
| Exhaust gas temp. (after engine): °C | 460 |
| Exhaust gas temp., max (after engine): °C | 550 |
| Exhaust gas temp. (before turbocharger): °C | 700 |
| Exhaust gas volume: $m^3/s$ | 6.2 |
| Maximum allowable back pressure: mbar | 50 |

## Standard and optional features

### System ratings (kW/kVA)

| Generator model | Voltage | fuel consumption optimized | | | | | |
|---|---|---|---|---|---|---|---|
| | | without radiator | | | with mechanical radiator | | |
| | | kWel | kVA* | AMPS | kWel | kVA* | AMPS |
| Leroy Somer LSA52.3 S7 (Low voltage Leroy Somer standard) | 380 V | 1840 | 2300 | 3494 | 1784 | 2230 | 3388 |
| | 400 V | 1840 | 2300 | 3320 | 1784 | 2230 | 3219 |
| | 415 V | 1840 | 2300 | 3200 | 1784 | 2230 | 3102 |
| Leroy Somer LSA52.3 L12 (Low voltage Leroy Somer oversized) | 380 V | 1840 | 2300 | 3494 | 1784 | 2230 | 3388 |
| | 400 V | 1840 | 2300 | 3320 | 1784 | 2230 | 3219 |
| | 415 V | 1840 | 2300 | 3200 | 1784 | 2230 | 3102 |
| Leroy Somer LSA53.2 XL9 (Medium volt. Leroy Somer) | 11 kV | 1840 | 2300 | 121 | 1792 | 2240 | 118 |
| Marathon 744RSL7092 (Low voltage Marathon) | 380 V | 1824 | 2280 | 3464 | 1776 | 2220 | 3373 |
| | 400 V | 1824 | 2280 | 3291 | 1776 | 2220 | 3204 |
| | 415 V | 1808 | 2260 | 3434 | 1776 | 2220 | 3088 |
| Marathon 1020FDH7097 (Medium volt. Marathon) | 11 kV | 1824 | 2280 | 120 | 1776 | 2220 | 117 |

* cos phi = 0.8

1 All data refers only to the engine and is based on ISO standard conditions (25°C and 100m above sea level).
2 Values referenced are in accordance with ISO 3046-1. Conversion calculated with fuel density of 0.83 g/ml. All fuel consumption values refer to rated engine power.

# Standard and optional features

## Engine

- ■ 4-cycle
- ■ Standard single stage air filter
- ■ Oil drain extension & shut-off valve
- ■ Closed crankcase ventilation
- ■ Governor-electronic isochronous
- ■ Common rail fuel injection
- ■ Fuel consumption optimized engine

## Generator

- ■ 4 pole three-phase synchronous generator
- ■ Brushless, self-excited, self-regulating, self-ventilated
- ■ Digital voltage regulator
- ■ Anti condensation heater
- ■ Stator winding Y-connected, accessible neutral (brought out)
- ■ Protection IP23
- ■ Insulation class H, utilization acc. to H
- ■ Radio suppression EN55011, group 1, cl. B
- ■ Short circuit capability 3xIn for 10sec
- ■ Winding and bearing RTDs (without monitoring)
- ■ Excitation by AREP + PMI
- ■ Mounting of CT´s: 3x 2 core CT´s
- ■ Winding pitch: 2/3 winding
- ■ Voltage setpoint adjustment ± 5%
- ■ Meets NEMA MG-1, BS 5000, IEC 60034-1, VDE 0530, DIN EN 12601, AS1359 and ISO 8528 requirements
- ■ Leroy Somer low voltage generator
- ☐ Marathon low voltage generator
- ☐ Oversized generator
- ☐ Medium voltage generator

## Cooling system

- ■ Jacket water pump
- ■ Thermostat(s)
- ■ Water charge air cooling
- ☐ Mechanical radiator
- ☐ Electrical driven front-end cooler
- ☐ Jacket water heater
- ☐ Pulley for fan drive

## Control panel

- ■ Pre-wired control cabinet for easy application of customized controller (V1+)
- ☐ Island operation (V2)
- ☐ Automatic mains failure operation with ATS (V3a)
- ☐ Automatic mains failure operation incl. control of generator and mains breaker (V3b)
- ☐ Island parallel operation of multiple gensets (V4)
- ☐ Automatic mains failure operation with short (< 10s) mains parallel overlap synchronization (V5)
- ☐ Mains parallel operation of a single genset (V6)
- ☐ Mains parallel operation of multiple gensets (V7)
- ☐ Basler controller
- ☐ Deif controller
- ■ Complete system metering
- ■ Digital metering
- ■ Engine parameters
- ■ Generator protection functions
- ■ Engine protection
- ■ SAE J1939 engine ECU communications
- ■ Parametrization software
- ■ Multilingual capability
- ■ Multiple programmable contact inputs
- ■ Multiple contact outputs
- ■ Event recording
- ■ IP 54 front panel rating with integrated gasket
- ☐ Different expansion modules
- ☐ Remote annunciator
- ☐ Daytank control
- ☐ Generator winding temperature monitoring
- ☐ Generator bearing temperature monitoring
- ☐ Modbus TCP-IP

## Power panel

- ☐ Available in 600x600 and 600x1000
- ☐ Phase monitoring relay 230V/400V
- ☐ Supply for battery charger
- ☐ Supply for jacket water heater
- ☐ Supply for anti condensation heating
- ☐ Plug socket cabinet for 230V compatible Euro/USA
- ☐ Supply for electrical driven radiator from 55kW (PP 600x1000)

■ Represents standard features

☐ Represents optional features

# Standard and optional features

## Circuit breaker/power distribution

- ☐ 3-pole circuit breaker
- ☐ 4-pole circuit breaker
- ☐ Manual-actuated circuit breaker
- ☐ Electrical-actuated circuit breaker
- ☐ Stand-alone solution in seperate cabinet

## Fuel system

- ■ Flexible fuel connectors mounted to base frame
- ☐ Fuel filter with water separator
- ☐ Fuel filter with water separator heavy-duty
- ☐ Switchable fuel filter with water separator
- ☐ Switchable fuel filter with water separator heavy-duty
- ☐ Seperate fuel cooler
- ☐ Fuel cooler integrated into cooling equipment

## Starting/charging system

- ■ 24V starter
- ☐ Starter batteries, cables, rack, disconnect switch
- ☐ Battery charger
- ☐ Redundant Starter 2x 15KW

## Mounting system

- ■ Welded base frame
- ■ Resilient engine and generator mounting
- ■ Modular base frame design

## Exhaust system

- ☐ Exhaust bellows with connection flange
- ☐ Exhaust silencer with 10 dB(A) sound attenuation
- ☐ Exhaust silencer with 30 dB(A) sound attenuation
- ☐ Exhaust silencer with 40 dB(A) sound attenuation
- ☐ Y-connection-pipe

■ Represents standard features
☐ Represents optional features

## Weights and dimensions

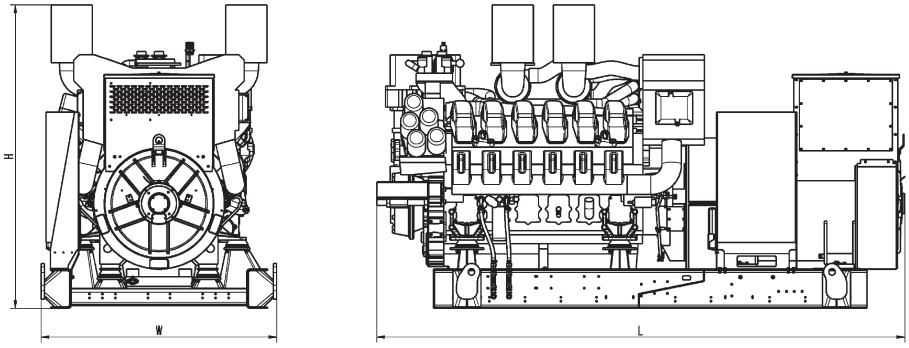


Drawing above for illustration purposes only, based on a standard open power 400 Volt engine-generator set. Lengths may vary with other voltages. Do not use for installation design. See website for unit specific template drawings.

| System | Dimensions (L x W x H) | Weight (dry/less tank) |
|---|---|---|
| Open power unit (OPU) | 4077 x 1810 x 2330 mm | 11.130 kg |

Weights and dimensions are based on open power units and are estimates only. Consult the factory for accurate weights and dimensions for your specific engine-generator set.

## Sound data

— Consult your local MTU distributor for sound data.

## Emissions data

— Consult your local MTU distributor for emissions data.

## Rating definitions and conditions

— Standby ratings apply to installations served by a reliable utility source. The standby rating is applicable to varying loads for the duration of a power outage. No overload capability for this rating. Ratings are in accordance with ISO 8528-1, ISO-3046-1, BS 5514 and AS 2789.
Average load factor: ≤ 85%. operating hours/year: max. 500.
— Consult your local MTU Distributor for derating information.

Subject to change. | 32311441 | Edition 02/20 | ESM 2020-10.

Rolls-Royce Group
www.mtu-solutions.com/powergen