Diesel Generator Set

MTU 10V1600 DS550

500 kVA/50 Hz/Prime (Fuel-Optimized)/380 - 415V
Reference MTU 10V1600 DS550 (550 kVA Fuel-Optimized) for Standby Rating Technical Data

System ratings **

Voltage (L-L)	380V	400V	415V
Phase	3	3	3
PF	0.8	0.8	0.8
Hz	50	50	50
kW	400	400	400
kVA	500	500	500
Amps	760	722	696
skVA@30% voltage dip	980	1,100	1,200
Generator model	572RSL4029	572RSL4029	572RSL4029
Temp rise	125 °C/40 °C	125 °C/40 °C	125 °C/40 °C
Connection	4 LEAD WYE	4 LEAD WYE	4 LEAD WYE

** Prime technical data is for a fuel-optimized prime unit.

Certifications and standards

- Generator set is designed and manufactured in facilities certified to standards ISO 9001:2008 and ISO 14001:2004
- Seismic certification – optional
  - IBC certification
- OSHPD pre-approval
- Performance Assurance Certification (PAC)
  - Generator set tested to ISO 8528-5 for transient response
  - Verified product design, quality and performance integrity
  - All engine systems are prototype and factory tested
- Power rating
  - Accepts rated load in one step per NFPA 110
  - Permissible average power output during 24 hours of operation is approved up to 75%.

A Rolls-Royce solution

Standard features *

- MTU is a single source supplier
- Global product support
- 2 year standard warranty
- 10V1600 diesel engine
  - 17.5 Liter displacement
  - Common rail fuel injection
  - 4-cycle
- Engine-generator resilient mounted
- Complete range of accessories
- Cooling system
  - Integral set-mounted
  - Engine-driven fan
- Generator
  - Brushless, rotating field generator
  - 2/3 pitch windings
  - PMG (Permanent Magnet Generator) supply to regulator
  - 300% short circuit capability
- Digital control panel(s)
  - UL recognized, CSA certified, NFPA 110
  - Complete system metering
  - LCD display

Standard equipment *

Engine

- Air cleaners
- Oil pump
- Oil drain extension and S/O valve
- Full flow oil filter
- Closed crankcase ventilation
- Jacket water pump
- Thermostats
- Blower fan and fan drive
- Radiator - unit mounted
- Electric starting motor - 24V
- Governor – electronic isochronous
- Base - formed steel
- SAE flywheel and bell housing
- Charging alternator - 24V
- Battery box and cables
- Flexible fuel connectors
- Flexible exhaust connection

Generator

- NEMA MG1, IEEE, and ANSI standards compliance for temperature rise and motor starting
- Sustained short circuit current of up to 300% of the rated current for up to 10 seconds
- Self-ventilated and drip-proof
- Superior voltage waveform
- Digital, solid state, volts-per-hertz regulator
- No load to full load regulation
- Brushless alternator with brushless pilot exciter
- 4 pole, rotating field
- 125 °C maximum prime temperature rise
- 1-bearing, sealed
- Flexible coupling
- Full amortisseur windings
- 125% rotor balancing
- 3-phase voltage sensing
- ±0.25% voltage regulation
- 100% of rated load - one step
- 5% maximum total harmonic distortion

Digital control panel(s)

- Digital metering
- Engine parameters
- Generator protection functions
- Engine protection
- CANBus ECU communications
- Windows®-based software
- Multilingual capability
- Remote communications to RDP-110 remote annunciator
- Programmable input and output contacts
- UL recognized, CSA certified, CE approved
- Event recording
- IP 54 front panel rating with integrated gasket
- NFPA 110 compatible

* Represents standard product only. Consult the factory/MTU Distributor for additional configurations.

Application data

Engine

Manufacturer	MTU
Model **	10V1600G20F
Type	4-cycle
Arrangement	10-V
Displacement: L (cu in)	17.5 (1,068)
Bore: cm (in)	12.2 (4.8)
Stroke: cm (in)	15 (5.91)
Compression ratio	17.5:1
Rated rpm	1,500
Engine governor	electronic isochronous (ADEC)
Maximum power: kWm (bhp) **	448 (601)
Speed regulation	± 0.25%
Air cleaner	dry

Liquid capacity (Lubrication)

Total oil system: L (gal)	61 (16)
Engine jacket water capacity: L (gal)	60 (15.9)
System coolant capacity: L (gal)	99.3 (26.2)

Electrical

Electric volts DC	24
Cold cranking amps under -17.8 °C (0 °F)	1,050

Fuel system

Fuel supply connection size	-10 JIC 37° female M20 x 1.5 male adapter provided
Fuel return connection size	-6 JIC 37° female M14 x 1.5 male adapter provided
Maximum fuel lift: m (ft)	5 (16)
Recommended fuel	diesel #2
Total fuel flow: L/hr (gal/hr)	340.7 (90)

Fuel consumption **

At 100% of power rating: L/hr (gal/hr)	100 (26.4)
At 75% of power rating: L/hr (gal/hr)	78 (20.6)
At 50% of power rating: L/hr (gal/hr)	57 (15.1)

Cooling - radiator system **

Ambient capacity of radiator: °C (°F)	50 (122)
Maximum restriction of cooling air: intake and discharge side of radiator: kPa (in. H_2O)	0.2 (0.8)
Water pump capacity: L/min (gpm)	390 (103)
Heat rejection to coolant: kW (BTUM)	216 (12,283)
Heat rejection to after cooler: kW (BTUM)	60 (3,412)
Heat radiated to ambient: kW (BTUM)	46.5 (2,644)
Fan power: kW (hp)	16.4 (22)

Air requirements **

Aspirating: *m^3/min (SCFM)	27 (953)
Air flow required for radiator cooled unit: *m^3/min (SCFM)	554 (19,564)
Remote cooled applications; air flow required for dissipation of radiated generator set heat for a maximum of 25 °F rise: *m^3/min (SCFM)	169 (5,964)

* Air density = 1.184 kg/m^3 (0.0739 lbm/ft^3)

Exhaust system **

Gas temp. (stack): °C (°F)	520 (968)
Gas volume at stack temp: m^3/min (CFM)	75 (2,649)
Maximum allowable back pressure at outlet of engine, before piping: kPa (in. H_2O)	8.5 (34.1)

** Prime technical data is for a fuel-optimized prime unit.

Weights and dimensions

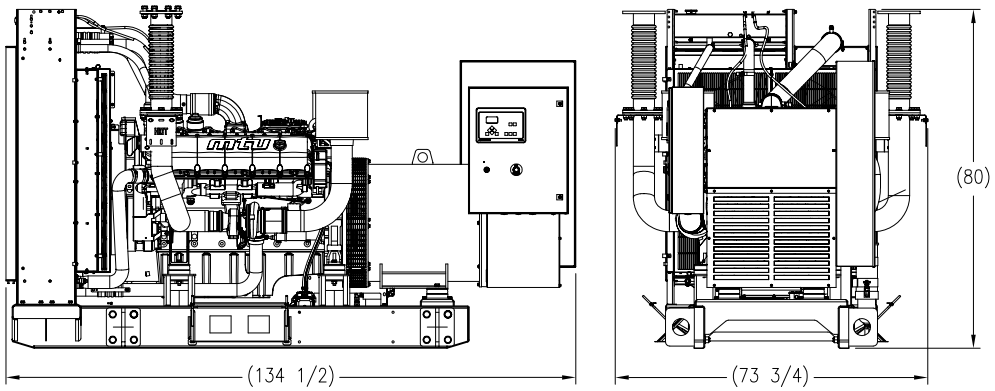

Drawing above for illustration purposes only, based on standard open power 400 volt generator set. Lengths may vary with other voltages. Do not use for installation design. See website for unit specific template drawings.

System	Dimensions (L x W x H)	Weight (dry/less tank)
Open power unit (OPU)	3,416 x 1,873 x 2,032 mm (134.5 x 73.8 x 80 in)	4,175-5,129 kg (9,205-11,308 lb)

Weights and dimensions are based on open power units and are estimates only. Consult the factory for accurate weights and dimensions for your specific generator set.

Sound data

Unit type	Prime full load
Level 0: Open power unit: dB(A)	88.3

Sound data is provided at 7 m (23 ft). Generator set tested in accordance with ISO 8528-10 and with infinite exhaust.

Emissions data

NO_x + NMHC	CO	PM
C/F	C/F	C/F

Rating definitions and conditions

- Prime power ratings apply to installations where utility power is unavailable or unreliable. At varying load, the number of generator set operating hours is unlimited. A 10% overload capacity is available for one hour in twelve. Ratings are in accordance with ISO 8528-1, ISO 3046-1, BS 5514, and AS 2789. Average load factor: ≤ 75%.
- Consult your local MTU Distributor for derating information.

C/F = Consult Factory/MTU Distributor
N/A = Not Available

Subject to change. | 23557 | 2020-02