Diesel Generator Set

MTU 12V1600 DS650

650 kVA/50 Hz/Standby (Fuel-Optimized)/380 - 415V
Reference MTU 12V1600 DS650 (590 kVA Fuel and Exhaust-Optimized) for Prime Rating Technical Data

System ratings

Voltage (L-L)	380V	400V	415V
Phase	3	3	3
PF	0.8	0.8	0.8
Hz	50	50	50
kW	520	520	520
kVA	650	650	650
Amps	988	938	904
skVA@30% voltage dip	1,450	1,600	1,750
Generator model	573RSL4033	573RSL4033	573RSL4033
Temp rise	150 °C/40 °C	150 °C/40 °C	150 °C/40 °C
Connection	4 LEAD WYE	4 LEAD WYE	4 LEAD WYE

Certifications and standards

- Generator set is designed and manufactured in facilities certified to standards ISO 9001:2008 and ISO 14001:2004
- Seismic certification – optional
  - IBC certification
  - OSHPD pre-approval
- Performance Assurance Certification (PAC)
  - Generator set tested to ISO 8528-5 for transient response
  - Verified product design, quality, and performance integrity
  - All engine systems are prototype and factory tested
- Power rating
  - Accepts rated load in one step per NFPA 110
  - Permissible average power output during 24 hours of operation is approved up to 85%.

A Rolls-Royce solution

Standard features *

- MTU is a single source supplier
- Global product support
- 2 year standard warranty
- 12V1600 diesel engine
  - 21.0 Liter displacement
  - Common rail fuel injection
  - 4-cycle
- Complete range of accessories
- Cooling system
  - Integral set-mounted
  - Engine-driven fan
- Generator
  - Brushless, rotating field generator
  - 2/3 pitch windings
  - PMG (Permanent Magnet Generator) supply to regulator
  - 300% short circuit capability
- Digital control panel(s)
  - UL recognized, CSA certified, NFPA 110
  - Complete system metering
  - LCD display

Standard equipment *

Engine

- Air cleaners
- Oil pump
- Oil drain extension and S/O valve
- Full flow oil filters
- Closed crankcase ventilation
- Jacket water pump
- Thermostats
- Blower fan and fan drive
- Radiator - unit mounted
- Electric starting motor - 24V
- Governor – electronic isochronous
- Base - formed steel
- SAE flywheel and bell housing
- Charging alternator - 24V
- Battery box and cables
- Flexible fuel connectors
- Flexible exhaust connection

Generator

- NEMA MG1, IEEE, and ANSI standards compliance for temperature rise and motor starting
- Sustained short circuit current of up to 300% of the rated current for up to 10 seconds
- Self-ventilated
- Superior voltage waveform
- Digital, solid state, volts-per-hertz regulator
- No load to full load regulation
- Brushless alternator with brushless pilot exciter
- 4 pole, rotating field
- 150 °C maximum standby temperature rise
- 1-bearing, sealed
- Flexible coupling
- Full amortisseur windings
- 125% rotor balancing
- 3-phase voltage sensing
- ±0.25% voltage regulation
- 100% of rated load - one step
- 5% maximum total harmonic distortion

Digital control panel(s)

- Digital metering
- Engine parameters
- Generator protection functions
- Engine protection
- CANBus ECU communications
- Windows®-based software
- Multilingual capability
- Remote communications to RDP-110 remote annunciator
- Programmable input and output contacts
- UL recognized, CSA certified, CE approved
- Event recording
- IP 54 front panel rating with integrated gasket
- NFPA 110 compatible

* Represents standard product only. Consult the factory/MTU Distributor for additional configurations.

Application data

Engine

Manufacturer	MTU
Model	12V1600G70F
Type	4-cycle
Arrangement	12-V
Displacement: L (cu in)	21 (1,281)
Bore: cm (in)	12 (4.72)
Stroke: cm (in)	15 (5.91)
Compression ratio	17.5:1
Rated rpm	1,500
Engine governor	electronic isochronous (ADEC)
Maximum power: kWm (bhp)	576 (772)
Speed regulation	± 0.25%
Air cleaner	dry

Liquid capacity (Lubrication)

Total oil system: L (gal)	73 (19.3)
Engine jacket water capacity: L (gal)	65 (17.2)
System coolant capacity: L (gal)	106 (28.1)

Electrical

Electric volts DC	24
Cold cranking amps under -17.8 °C (0 °F)	1,050

Fuel system

Fuel supply connection size	-10 JIC 37° female M20 x 1.5 male adapter provided
Fuel return connection size	-6 JIC 37° female M14 x 1.5 male adapter provided
Maximum fuel lift: m (ft)	5 (16)
Recommended fuel	diesel #2
Total fuel flow: L/hr (gal/hr)	341.8 (90.3)

Fuel consumption

At 100% of power rating: L/hr (gal/hr)	130 (34.3)
At 75% of power rating: L/hr (gal/hr)	100 (26.4)
At 50% of power rating: L/hr (gal/hr)	70 (18.4)

Cooling - radiator system

Ambient capacity of radiator: °C (°F)	50 (122)
Maximum restriction of cooling air: intake and discharge side of radiator: kPa (in. H_2O)	0.2 (0.8)
Water pump capacity: L/min (gpm)	433 (115)
Heat rejection to coolant: kW (BTUM)	236 (13,421)
Heat rejection to after cooler: kW (BTUM)	104 (5,914)
Heat radiated to ambient: kW (BTUM)	59.4 (3,378)
Fan power: kW (hp)	25.4 (34)

Air requirements

Aspirating: *m^3/min (SCFM)	48 (1,695)
Air flow required for radiator cooled unit: *m^3/min (SCFM)	803 (28,350)
Remote cooled applications; air flow required for dissipation of radiated generator set heat for a maximum of 25 °F rise: *m^3/min (SCFM)	216 (7,618)

* Air density = 1.184 kg/m^3 (0.0739 lbm/ft^3)

Exhaust system

Gas temp. (stack): °C (°F)	484 (903)
Gas volume at stack temp: m^3/min (CFM)	126 (4,450)
Maximum allowable back pressure at outlet of engine, before piping: kPa (in. H_2O)	8.5 (34.1)

Weights and dimensions

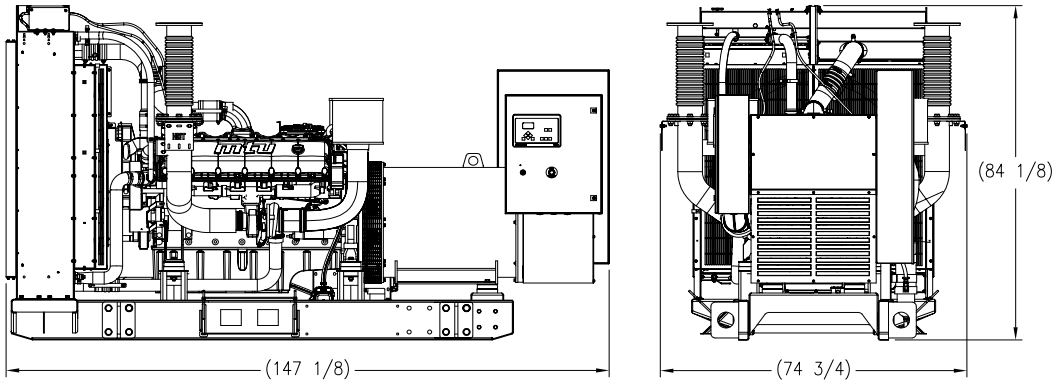

Drawing above for illustration purposes only, based on standard open power 400 volt generator set. Lengths may vary with other voltages. Do not use for installation design. See website for unit specific template drawings.

System	Dimensions (L x W x H)	Weight (dry/less tank)
Open power unit (OPU)	3,737 x 1,899 x 2,137 mm (147.1 x 74.8 x 84.1 in)	5,249 kg (11,572 lb)

Weights and dimensions are based on open power units and are estimates only. Consult the factory for accurate weights and dimensions for your specific generator set.

Sound data

Unit type	Standby full load
Level 0: Open power unit: dB(A)	C/F

Sound data is provided at 7 m (23 ft). Generator set tested in accordance with ISO 8528-10 and with infinite exhaust.

Emissions data

NO_x + NMHC	CO	PM
C/F	C/F	C/F

Rating definitions and conditions

- Standby ratings apply to installations served by a reliable utility source. The standby rating is applicable to varying loads for the duration of a power outage. No overload capability for this rating. Ratings are in accordance with ISO 8528-1, ISO-3046-1, BS 5514, and AS 2789. Average load factor: ≤ 85%. Operating hours per year: Max. 500.
- Consult your local MTU Distributor for derating information.

C/F = Consult Factory/MTU Distributor
N/A = Not Available

Subject to change. | 23566 | 2020-02