Diesel Generator Set

MTU 4R0113 DS50

45 kWe/60 Hz/Prime/208 - 600V
Reference MTU 4R0113 DS50 (50 kWe) for Standby Rating Technical Data

System ratings

Voltage (L-L)	240V †	240V †	208V †	240V †	380V †	480V †	600V
Phase	1	1	3	3	3	3	3
PF	1	1	0.8	0.8	0.8	0.8	0.8
Hz	60	60	60	60	60	60	60
kW	45	45	45	45	45	45	45
kVA	45	45	56	56	56	56	56
Amps	187	187	156	135	85	67	54
skVA@30% voltage dip	127	117	129	129	172	172	92
Generator model	362CSL1604	361CSL1612	361CSL1601	361CSL1601	361CSL1602	361CSL1601	361PSL1632
Temp rise	105 °C/40 °C	105 °C/40 °C	105 °C/40 °C	105 °C/40 °C	105 °C/40 °C	105 °C/40 °C	105 °C/40 °C
Connection	12 LEAD DOUBLE DELTA	4 LEAD	12 LEAD WYE	12 LEAD DELTA	12 LEAD WYE	12 LEAD WYE	4 LEAD WYE

† UL 2200 offered

Certifications and standards

- Emissions
  - EPA Tier 3 certified
- Generator set is designed and manufactured in facilities certified to standards ISO 9001:2008 and ISO 14001:2004
- Seismic certification – optional
  - IBC certification
- UL 2200 – optional (refer to *System ratings* for availability)
- CSA – optional
  - CSA C22.2 No. 100
  - CSA C22.2 No. 14
- Performance Assurance Certification (PAC)
  - Generator set tested to ISO 8528-5 for transient response
  - Verified product design, quality and performance integrity
  - All engine systems are prototype and factory tested
- Power rating
  - Accepts rated load in one step per NFPA 110

A Rolls-Royce solution

Standard features *

- MTU is a single source supplier
- Global product support
- 2 year standard warranty
- 4045TF280 diesel engine
  - 4.5 liter displacement
  - Mechanical injection pump
  - 4-cycle
- Engine-generator resilient mounted
- Complete range of accessories
- Cooling system
  - Integral set-mounted
  - Engine-driven fan
- Generator
  - Brushless, rotating field generator
  - 2/3 pitch windings
  - 300% short circuit capability with optional Permanent Magnet Generator (PMG)
- Digital control panel(s)
  - UL recognized, CSA certified, NFPA 110
  - Complete system metering
  - LCD display

Standard equipment *

Engine

- Air cleaner
- Oil pump
- Oil drain extension and S/O valve
- Full flow oil filter
- Fuel filter with water seperator
- Jacket water pump
- Thermostat
- Blower fan and fan drive
- Radiator - unit mounted
- Electric starting motor - 12V
- Governor – mechanical droop
- Base - formed steel
- SAE flywheel and bell housing
- Charging alternator - 12V
- Battery box and cables
- Flexible fuel connectors
- Flexible exhaust connection
- EPA certified engine

Generator

- NEMA MG1, IEEE, and ANSI standards compliance for temperature rise and motor starting
- Self-ventilated and drip-proof
- Superior voltage waveform
- Solid state, volts-per-hertz regulator
- ±1% voltage regulation no load to full load
- Brushless alternator with brushless pilot exciter
- 4 pole, rotating field
- 105 °C maximum prime temperature rise
- 1-bearing, sealed
- Flexible coupling
- Full amortisseur windings
- 125% rotor balancing
- 3-phase voltage sensing
- 100% of rated load - one step
- 5% maximum total harmonic distortion

Digital control panel(s)

- Digital metering
- Engine parameters
- Generator protection functions
- Engine protection
- Windows®-based software
- Multilingual capability
- Remote communications to RDP-110 remote annunciator
- Programmable input and output contacts
- UL recognized, CSA certified, CE approved
- Event recording
- IP 54 front panel rating with integrated gasket
- NFPA 110 compatible

* Represents standard product only. Consult the factory/MTU Distributor for additional configurations.

Application data

Engine

Manufacturer	John Deere
Model	4045TF280
Type	4-cycle
Arrangement	4-inline
Displacement: L (in^3)	4.5 (275)
Bore: cm (in)	10.6 (4.19)
Stroke: cm (in)	12.7 (5)
Compression ratio	19:1
Rated rpm	1,800
Engine governor	mechanical droop
Maximum power: kWm (bhp)	57 (76)
Speed regulation	± 0.5%
Air cleaner	dry

Liquid capacity (Lubrication)

Total oil system: L (gal)	13 (3.4)
Engine jacket water capacity: L (gal)	8.5 (2.3)
System coolant capacity: L (gal)	18.9 (5)

Electrical

Electric volts DC	12
Cold cranking amps under -17.8 °C (0 °F)	925

Fuel system

Fuel supply connection size	3/8” NPT
Fuel return connection size	3/8” NPT
Maximum fuel lift: m (ft)	1.8 (6)
Recommended fuel	diesel #2
Total fuel flow: L/hr (gal/hr)	56.4 (14.9)

Fuel consumption

At 100% of power rating: L/hr (gal/hr)	15.9 (4.2)
At 75% of power rating: L/hr (gal/hr)	12.5 (3.3)
At 50% of power rating: L/hr (gal/hr)	9.1 (2.4)

Cooling - radiator system

Ambient capacity of radiator: °C (°F)	50 (122)
Maximum restriction of cooling air: intake and discharge side of radiator: kPa (in. H_2O)	0.12 (0.5)
Water pump capacity: L/min (gpm)	144 (38)
Heat rejection to coolant: kW (BTUM)	33 (1,878)
Heat radiated to ambient: kW (BTUM)	7.3 (415)
Fan power: kW (hp)	1.6 (2.2)

Air requirements

Aspirating: *m^3/min (SCFM)	5.1 (180)
Air flow required for radiator cooled unit: *m^3/min (SCFM)	117 (4,088)
Remote cooled applications; air flow required for dissipation of radiated generator set heat for a maximum of 25 °F rise: *m^3/min (SCFM)	27 (937)

* Air density = 1.184 kg/m^3 (0.0739 lbm/ft^3)

Exhaust system

Gas temp. (stack): °C (°F)	551 (1,024)
Gas volume at stack temp: m^3/min (CFM)	18.3 (645)
Maximum allowable back pressure at outlet of engine, before piping: kPa (in. H_2O)	7.5 (30)
Minimum allowable back pressure: kPa (in. H_2O)	N/A

Weights and dimensions

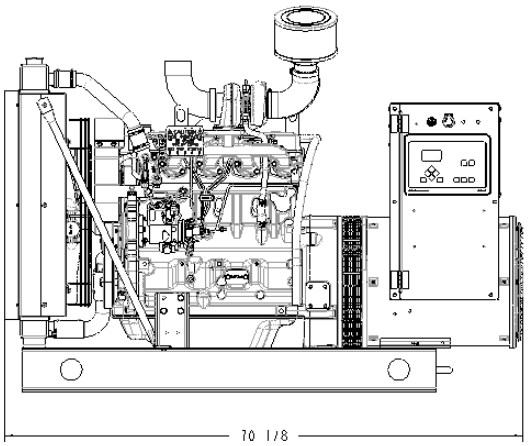

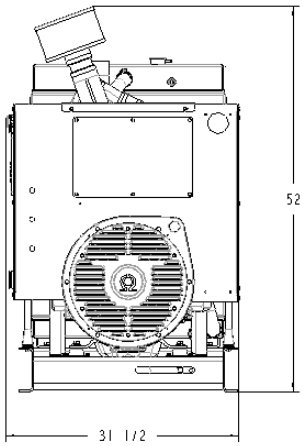

Drawing above for illustration purposes only, based on standard open power 480 volt generator set. Lengths may vary with other voltages. Do not use for installation design. See website for unit specific template drawings.

System	Dimensions (L x W x H)	Weight (dry/less tank)
Open power unit (OPU)	1,781 x 800 x 1,321 mm (70.1 x 31.5 x 52 in)	943-1,404 kg (2,078-3,095 lb)

Weights and dimensions are based on open power units and are estimates only. Consult the factory for accurate weights and dimensions for your specific generator set.

Sound data

Unit type	Prime full load
Level 0: Open power unit: dB(A)	80.2

Sound data is provided at 7 m (23 ft). Generator set tested in accordance with ISO 8528-10 and with infinite exhaust.

Emissions data

NO_x + NMHC	CO	PM
3.8	0.69	0.22

All units are in g/hp-hr and shown at 100% load (not comparable to EPA weighted cycle values). Emission levels of the engine may vary with ambient temperature, barometric pressure, humidity, fuel type and quality, installation parameters, measuring instrumentation, etc. The data was obtained in compliance with US EPA regulations. The weighted cycle value (not shown) from each engine is guaranteed to be within the US EPA standards. 5-mode emission data per 40 CFR 89 or 40 CFR 1039 (as applicable) is available upon request.

Rating definitions and conditions

- Prime power ratings apply to installations where utility power is unavailable or unreliable. At varying load, the number of generator set operating hours is unlimited. A 10% overload capacity is available for one hour in twelve. Ratings are in accordance with ISO 8528-1, overload power in accordance with ISO 3046-1, BS 5514, and AS 2789. Average load factor: ≤ 75%.
- Consult your local MTU Distributor for derating information.

Subject to change. | 23499 | 2020-02